THIS DRAWING IS UNPUBLISHED. RELEASED FOR PUBLICATION -.- .
© COPYRIGHT - BY TYCO ELECTRONICS CORPORATION. ALL RIGHTS RESERVED.

LOC	DIST
DF	DO

REVISIONS

P	LTR	DESCRIPTION	DATE	DWN	APVD
	E	REV PER ECO-08-019991	22OCT08	PK	BW

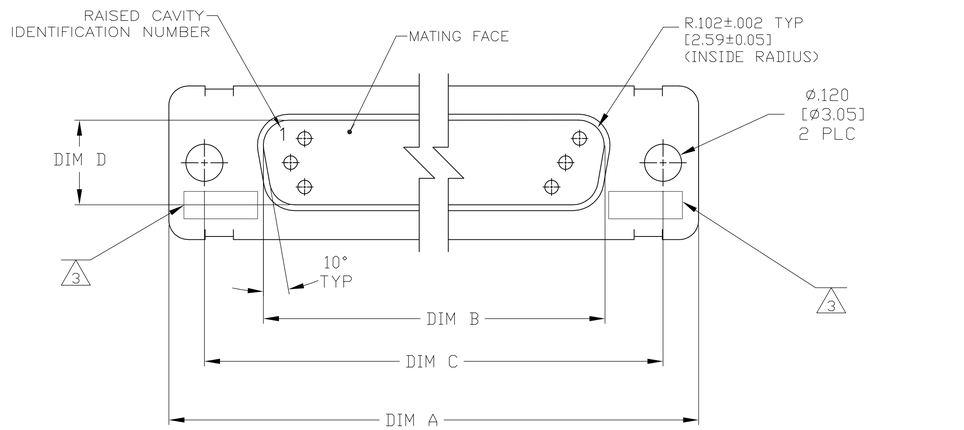

1. THE CONNECTOR DESCRIBED IN THIS DOCUMENT WILL MATE WITH ANY RECEPTACLE CONNECTOR WITH THE SAME INSERT ARRANGEMENT.
2. MARKED WITH .047-.062 [1.19-1.57] HIGH CHARACTERS. FAR SIDE REFERS TO THE WIDE SIDE OF THE KEYSTONE. NEAR SIDE REFERS TO THE NARROW SIDE OF THE KEYSTONE. WHEN SPACE IS LIMITED MARKING CAN BE SPLIT BETWEEN FRONT AND REAR SHELL.
3. UL/CSA DESIGNATION MARKED IN THIS AREA.
4. CONNECTOR ASSEMBLY WITHOUT CONTACTS, MFG'S P/N 204370-2. MUST BE ORDERED SEPARATELY.
5. CONNECTOR ASSEMBLY SUPPLIED WITH CONTACTS, MFG'S P/N 204370-2. PACKAGED IN A SEPARATE CONTAINER. QTY = NO. OF POSN. (SEE TABLE).

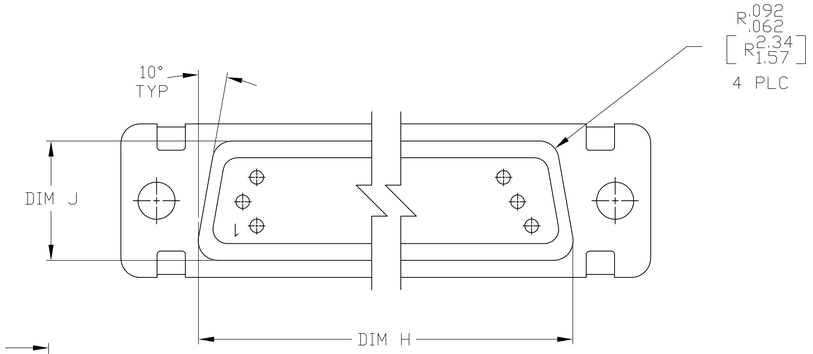

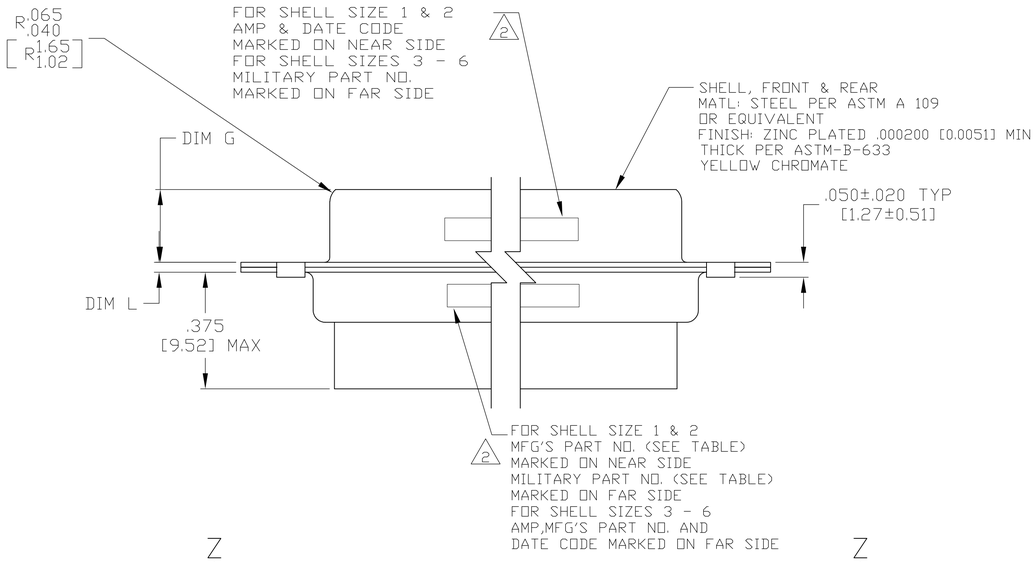

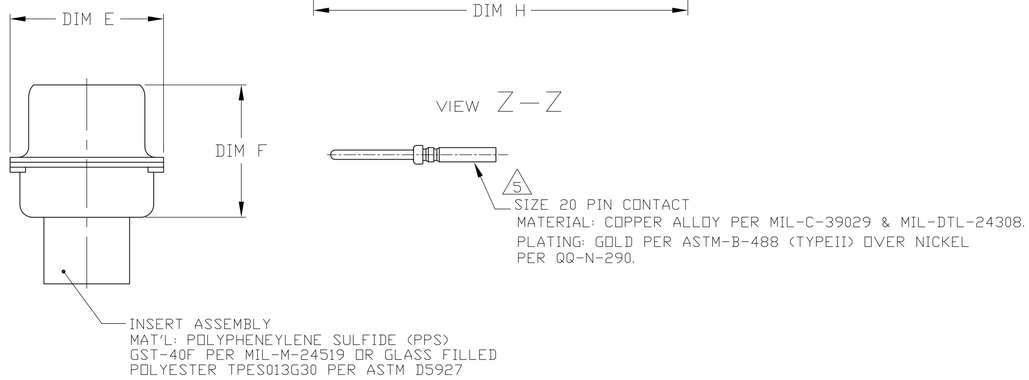

REMARKS	MILITARY P/N ON PACKAGE	MILITARY P/N ON CONNECTOR 2	MARKED 2 MFG'S PART NUMBER	L	J	H	G	F	E	D	C	B	A	INSERT ARRANGEMENT	NO OF POS	SHELL SIZE	PART NUMBER
5	M24308/4-16	M24308/4-16	1-1757823-2	.049 [1.24] .029 [0.74]	.606 [15.39] .586 [14.88]	2.312 [58.72] 2.292 [58.22]	.236 [5.99] .224 [5.69]	.436 [11.07] .416 [10.57]	.683 [17.35] .653 [16.59]	.508 [12.90] .498 [12.65]	2.505 [63.63] 2.495 [63.37]	2.217 [56.31] 2.207 [56.06]	2.744 [69.70] 2.714 [68.94]	MS14004-1	104	6	1-1757823-2
5	M24308/4-15	M24308/4-15	1-1757823-1	.049 [1.24] .029 [0.74]	.544 [13.82] .524 [13.31]	2.188 [55.58] 2.168 [55.07]	.236 [5.99] .224 [5.69]	.436 [11.07] .416 [10.57]	.620 [15.75] .590 [14.99]	.446 [11.33] .436 [11.07]	2.411 [61.24] 2.401 [60.99]	2.084 [52.93] 2.074 [52.68]	2.650 [67.31] 2.620 [66.55]	MS18277-2	78	5	1-1757823-1
5	M24308/4-14	M24308/4-14	1-1757823-0	.049 [1.24] .029 [0.74]	.432 [10.97] .412 [10.46]	2.282 [57.96] 2.262 [57.45]	.236 [5.99] .224 [5.69]	.436 [11.07] .416 [10.57]	.509 [12.93] .479 [12.17]	.334 [8.48] .324 [8.23]	2.505 [63.63] 2.495 [63.37]	2.187 [55.55] 2.177 [55.30]	2.744 [69.70] 2.714 [68.94]	MS18276-2	62	4	1-1757823-0
5	M24308/4-13	M24308/4-13	1757823-9	.049 [1.24] .029 [0.74]	.432 [10.97] .412 [10.46]	1.635 [41.53] 1.615 [41.02]	.236 [5.99] .224 [5.69]	.436 [11.07] .416 [10.57]	.509 [12.93] .479 [12.17]	.334 [8.48] .324 [8.23]	1.857 [47.17] 1.847 [46.91]	1.539 [39.09] 1.529 [38.84]	2.103 [53.42] 2.073 [52.65]	MS18275-2	44	3	1757823-9
5	M24308/4-12	M24308/4-12	1757823-8	.040 [1.02] .020 [0.51]	.432 [10.97] .412 [10.46]	1.093 [27.76] 1.073 [27.25]	.238 [6.05] .229 [5.82]	.432 [10.97] .412 [10.46]	.509 [12.93] .479 [12.17]	.334 [8.48] .324 [8.23]	1.317 [33.45] 1.307 [33.20]	.999 [25.37] .989 [25.12]	1.556 [39.52] 1.526 [38.76]	MS18274-2	26	2	1757823-8
5	M24308/4-11	M24308/4-11	1757823-7	.040 [1.02] .020 [0.51]	.432 [10.97] .412 [10.46]	.769 [19.53] .749 [19.02]	.238 [6.05] .229 [5.82]	.432 [10.97] .412 [10.46]	.509 [12.93] .479 [12.17]	.334 [8.48] .324 [8.23]	.989 [25.12] .979 [24.87]	.671 [17.04] .661 [16.79]	1.228 [31.19] 1.198 [30.43]	MS18273-2	15	1	1757823-7
4	M24308/4-269	M24308/4-16	1-1757823-2	.049 [1.24] .029 [0.74]	.606 [15.39] .586 [14.88]	2.312 [58.72] 2.292 [58.22]	.236 [5.99] .224 [5.69]	.436 [11.07] .416 [10.57]	.683 [17.35] .653 [16.59]	.508 [12.90] .498 [12.65]	2.505 [63.63] 2.495 [63.37]	2.217 [56.31] 2.207 [56.06]	2.744 [69.70] 2.714 [68.94]	MS14004-1	104	6	1757823-6
4	M24308/4-268	M24308/4-15	1-1757823-1	.049 [1.24] .029 [0.74]	.544 [13.82] .524 [13.31]	2.188 [55.58] 2.168 [55.07]	.236 [5.99] .224 [5.69]	.436 [11.07] .416 [10.57]	.620 [15.75] .590 [14.99]	.446 [11.33] .436 [11.07]	2.411 [61.24] 2.401 [60.99]	2.084 [52.93] 2.074 [52.68]	2.650 [67.31] 2.620 [66.55]	MS18277-2	78	5	1757823-5
4	M24308/4-267	M24308/4-14	1-1757823-0	.049 [1.24] .029 [0.74]	.432 [10.97] .412 [10.46]	2.282 [57.96] 2.262 [57.45]	.236 [5.99] .224 [5.69]	.436 [11.07] .416 [10.57]	.509 [12.93] .479 [12.17]	.334 [8.48] .324 [8.23]	2.505 [63.63] 2.495 [63.37]	2.187 [55.55] 2.177 [55.30]	2.744 [69.70] 2.714 [68.94]	MS18276-2	62	4	1757823-4
4	M24308/4-266	M24308/4-13	1757823-9	.049 [1.24] .029 [0.74]	.432 [10.97] .412 [10.46]	1.635 [41.53] 1.615 [41.02]	.236 [5.99] .224 [5.69]	.436 [11.07] .416 [10.57]	.509 [12.93] .479 [12.17]	.334 [8.48] .324 [8.23]	1.857 [47.17] 1.847 [46.91]	1.539 [39.09] 1.529 [38.84]	2.103 [53.42] 2.073 [52.65]	MS18275-2	44	3	1757823-3
4	M24308/4-265	M24308/4-12	1757823-8	.040 [1.02] .020 [0.51]	.432 [10.97] .412 [10.46]	1.093 [27.76] 1.073 [27.25]	.238 [6.05] .229 [5.82]	.432 [10.97] .412 [10.46]	.509 [12.93] .479 [12.17]	.334 [8.48] .324 [8.23]	1.317 [33.45] 1.307 [33.20]	.999 [25.37] .989 [25.12]	1.556 [39.52] 1.526 [38.76]	MS18274-2	26	2	1757823-2
4	M24308/4-264	M24308/4-11	1757823-7	.040 [1.02] .020 [0.51]	.432 [10.97] .412 [10.46]	.769 [19.53] .749 [19.02]	.238 [6.05] .229 [5.82]	.432 [10.97] .412 [10.46]	.509 [12.93] .479 [12.17]	.334 [8.48] .324 [8.23]	.989 [25.12] .979 [24.87]	.671 [17.04] .661 [16.79]	1.228 [31.19] 1.198 [30.43]	MS18273-2	15	1	1757823-1

THIS DRAWING IS A CONTROLLED DOCUMENT.

DIMENSIONS: INCHES

TOLERANCES UNLESS OTHERWISE SPECIFIED:
0 PLC ± –
1 PLC ± –
2 PLC ± –
3 PLC ± .005 [0.13]
4 PLC ± –
ANGLES ± 1°

MATERIAL: SEE CALLOUTS
FINISH: SEE CALLOUTS

DWN C.C.THOMAS 6-3-05
CHK D.MILLER 6-8-05
APVD D.MILLER 6-8-05
PRODUCT SPEC —
APPLICATION SPEC —
WEIGHT —

Tyco Electronics
Tyco Electronics Corporation
Harrisburg, PA 17105-3608

NAME: AMPLIMITE PLUG ASSY,SIZE 1 THRU 6
SERIES 90 WITH ZINC PLATED SHELLS
—

SIZE	CAGE CODE	DRAWING NO	RESTRICTED TO
A1	00779	C-1757823	—

CUSTOMER DRAWING | SCALE 4:1 | SHEET 1 OF 1 | REV E