CONN SIZE	FILTER DESIGNATION	FILTER CIRCUITS	CAPACITANCE VALUE	CAPACITANCE TOLERANCE	3 dB MAX CUTOFF FREQ (MHz)	DIELECTRIC WITHSTANDING VOLTAGE	CONTACT RATING	CONTACT RESIST	WORKING VOLTAGE DC −55°C TO +125°C	MINIMUM INSERTION LOSS−DECIBELS (dB) 5 MHz	10 MHz	20 MHz	50 MHz	100 MHz	200 MHz	500 MHz	1 GHz
25	J	Pi	100pF	+100% −0%	32	300V	5A	.010 OHM MAX	100V	–	–	–	2	6	11	27	40

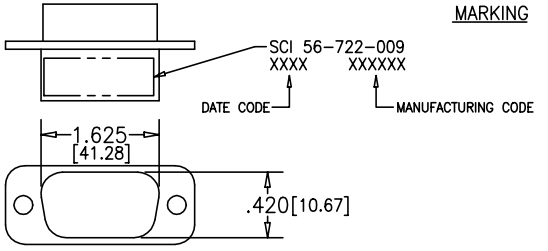

NOTES:

1. SHELL: NICKEL PLATED ZINC
2. INSULATORS: UL94V−0
3. CONTACTS: COPPER ALLOY: .000015 GOLD IN PIN CONTACT MATING AREAS
4. RADIO FREQUENCY GROUND CONTACT FROM THE CONNECTOR SHELL TO THE MATING CONNECTOR IS ASSURED BY A COAXIAL SPRING CLIP

FILTER ELEMENT LOCATION

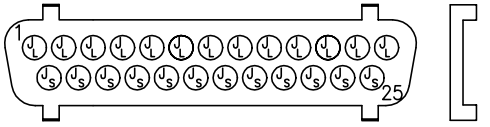

J_L = 51−820−239

J_S = 51−820−235

ENGAGEMENT VIEW

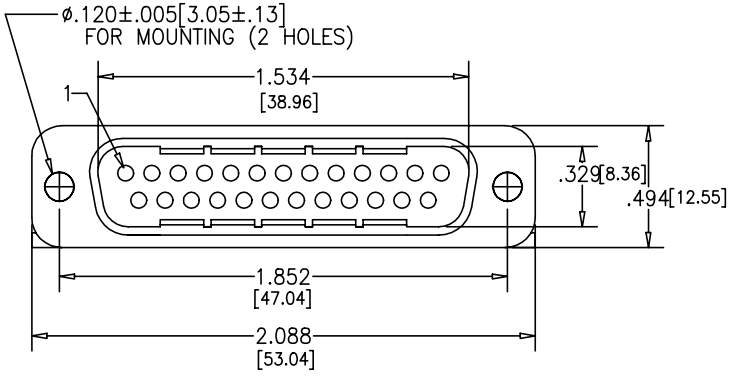

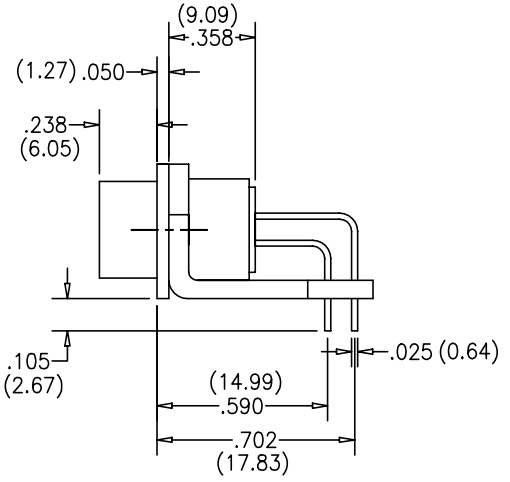

REV. NO.	CHANGE NOTICE
34	CN 193477

UNLESS OTHERWISE SPECIFIED DIMENSIONS ARE IN INCHES.

CADD SCALE: N/A
PLOT SCALE: N/A

TOLERANCES UNLESS OTHERWISE SPECIFIED
Fractions ± 1/64
Dec. .xx± .010
Dec. .xxx± .015
Angles ±0° 30'

CODE IDENT. NO. OLSP2

SPECTRUM CONTROL INC.

CONNECTOR PRODUCTS DIVISION
ERIE, PENNSYLVANIA

Dwn. M. WOJTECKI
Date 11/30/99
Apvd. E. FLEMING
Sheet 1 of 1

Description
PIN − 90°PCB
25L FILTERED CONNECTOR

A 56−722−009

THIS DRAWING CONTAIN PROPRIETARY INFORMATION. SPECTRUM CONTROL RESERVES ALL RIGHTS. THIS DOCUMENT SHALL NOT BE REPRODUCED IN WHOLE OR IN PART FOR ANY PURPOSE.

Quality Products From The Specialists In Electro−Magnetic Compatibility