To our customers,

Old Company Name in Catalogs and Other Documents

On April 1st, 2010, NEC Electronics Corporation merged with Renesas Technology Corporation, and Renesas Electronics Corporation took over all the business of both companies. Therefore, although the old company name remains in this document, it is a valid Renesas Electronics document. We appreciate your understanding.

Renesas Electronics website: http://www.renesas.com

April 1st, 2010
Renesas Electronics Corporation

Issued by: Renesas Electronics Corporation (http://www.renesas.com)

Send any inquiries to http://www.renesas.com/inquiry.

Notice

1. All information included in this document is current as of the date this document is issued. Such information, however, is subject to change without any prior notice. Before purchasing or using any Renesas Electronics products listed herein, please confirm the latest product information with a Renesas Electronics sales office. Also, please pay regular and careful attention to additional and different information to be disclosed by Renesas Electronics such as that disclosed through our website.
2. Renesas Electronics does not assume any liability for infringement of patents, copyrights, or other intellectual property rights of third parties by or arising from the use of Renesas Electronics products or technical information described in this document. No license, express, implied or otherwise, is granted hereby under any patents, copyrights or other intellectual property rights of Renesas Electronics or others.
3. You should not alter, modify, copy, or otherwise misappropriate any Renesas Electronics product, whether in whole or in part.
4. Descriptions of circuits, software and other related information in this document are provided only to illustrate the operation of semiconductor products and application examples. You are fully responsible for the incorporation of these circuits, software, and information in the design of your equipment. Renesas Electronics assumes no responsibility for any losses incurred by you or third parties arising from the use of these circuits, software, or information.
5. When exporting the products or technology described in this document, you should comply with the applicable export control laws and regulations and follow the procedures required by such laws and regulations. You should not use Renesas Electronics products or the technology described in this document for any purpose relating to military applications or use by the military, including but not limited to the development of weapons of mass destruction. Renesas Electronics products and technology may not be used for or incorporated into any products or systems whose manufacture, use, or sale is prohibited under any applicable domestic or foreign laws or regulations.
6. Renesas Electronics has used reasonable care in preparing the information included in this document, but Renesas Electronics does not warrant that such information is error free. Renesas Electronics assumes no liability whatsoever for any damages incurred by you resulting from errors in or omissions from the information included herein.
7. Renesas Electronics products are classified according to the following three quality grades: "Standard", "High Quality", and "Specific". The recommended applications for each Renesas Electronics product depends on the product's quality grade, as indicated below. You must check the quality grade of each Renesas Electronics product before using it in a particular application. You may not use any Renesas Electronics product for any application categorized as "Specific" without the prior written consent of Renesas Electronics. Further, you may not use any Renesas Electronics product for any application for which it is not intended without the prior written consent of Renesas Electronics. Renesas Electronics shall not be in any way liable for any damages or losses incurred by you or third parties arising from the use of any Renesas Electronics product for an application categorized as "Specific" or for which the product is not intended where you have failed to obtain the prior written consent of Renesas Electronics. The quality grade of each Renesas Electronics product is "Standard" unless otherwise expressly specified in a Renesas Electronics data sheets or data books, etc.

   "Standard": Computers; office equipment; communications equipment; test and measurement equipment; audio and visual equipment; home electronic appliances; machine tools; personal electronic equipment; and industrial robots.

   "High Quality": Transportation equipment (automobiles, trains, ships, etc.); traffic control systems; anti-disaster systems; anti-crime systems; safety equipment; and medical equipment not specifically designed for life support.

   "Specific": Aircraft; aerospace equipment; submersible repeaters; nuclear reactor control systems; medical equipment or systems for life support (e.g. artificial life support devices or systems), surgical implantations, or healthcare intervention (e.g. excision, etc.), and any other applications or purposes that pose a direct threat to human life.
8. You should use the Renesas Electronics products described in this document within the range specified by Renesas Electronics, especially with respect to the maximum rating, operating supply voltage range, movement power voltage range, heat radiation characteristics, installation and other product characteristics. Renesas Electronics shall have no liability for malfunctions or damages arising out of the use of Renesas Electronics products beyond such specified ranges.
9. Although Renesas Electronics endeavors to improve the quality and reliability of its products, semiconductor products have specific characteristics such as the occurrence of failure at a certain rate and malfunctions under certain use conditions. Further, Renesas Electronics products are not subject to radiation resistance design. Please be sure to implement safety measures to guard them against the possibility of physical injury, and injury or damage caused by fire in the event of the failure of a Renesas Electronics product, such as safety design for hardware and software including but not limited to redundancy, fire control and malfunction prevention, appropriate treatment for aging degradation or any other appropriate measures. Because the evaluation of microcomputer software alone is very difficult, please evaluate the safety of the final products or system manufactured by you.
10. Please contact a Renesas Electronics sales office for details as to environmental matters such as the environmental compatibility of each Renesas Electronics product. Please use Renesas Electronics products in compliance with all applicable laws and regulations that regulate the inclusion or use of controlled substances, including without limitation, the EU RoHS Directive. Renesas Electronics assumes no liability for damages or losses occurring as a result of your noncompliance with applicable laws and regulations.
11. This document may not be reproduced or duplicated, in any form, in whole or in part, without prior written consent of Renesas Electronics.
12. Please contact a Renesas Electronics sales office if you have any questions regarding the information contained in this document or Renesas Electronics products, or if you have any other inquiries.

(Note 1) "Renesas Electronics" as used in this document means Renesas Electronics Corporation and also includes its majority-owned subsidiaries.

(Note 2) "Renesas Electronics product(s)" means any product developed or manufactured by or for Renesas Electronics.

1. Overview

These MCUs are fabricated using the high-performance silicon gate CMOS process, embedding the R8C/Tiny Series CPU core, and is packaged in a 20-pin molded-plastic LSSOP, SDIP or a 28-pin plastic molded-HWQFN. It implements sophisticated instructions for a high level of instruction efficiency. With 1 Mbyte of address space, they are capable of executing instructions at high speed.
Furthermore, the R8C/1B Group has on-chip data flash ROM (1 KB × 2 blocks).
The difference between the R8C/1A Group and R8C/1B Group is only the presence or absence of data flash ROM. Their peripheral functions are the same.

1.1 Applications

Electric household appliances, office equipment, housing equipment (sensors, security systems), portable equipment, general industrial equipment, audio equipment, etc.

1.2 Performance Overview

Table 1.1 outlines the Functions and Specifications for R8C/1A Group and Table 1.2 outlines the Functions and Specifications for R8C/1B Group.

Table 1.1 Functions and Specifications for R8C/1A Group

Item		Specification
CPU	Number of fundamental instructions	89 instructions
	Minimum instruction execution time	50 ns (f(XIN) = 20 MHz, VCC = 3.0 to 5.5 V) 100 ns (f(XIN) = 10 MHz, VCC = 2.7 to 5.5 V)
	Operating mode	Single-chip
	Address space	1 Mbyte
	Memory capacity	See **Table 1.3 Product Information for R8C/1A Group**
Peripheral Functions	Ports	I/O ports: 13 pins (including LED drive port) Input port: 3 pins
	LED drive ports	I/O ports: 4 pins
	Timers	Timer X: 8 bits × 1 channel, timer Z: 8 bits × 1 channel (Each timer equipped with 8-bit prescaler) Timer C: 16 bits × 1 channel (Input capture and output compare circuits)
	Serial interfaces	1 channel Clock synchronous serial I/O, UART 1 channel UART
	Clock synchronous serial interface	1 channel I^2C bus Interface(1) Clock synchronous serial I/O with chip select (SSU)
	A/D converter	10-bit A/D converter: 1 circuit, 4 channels
	Watchdog timer	15 bits × 1 channel (with prescaler) Reset start selectable, count source protection mode
	Interrupts	Internal: 11 sources, External: 4 sources, Software: 4 sources, Priority levels: 7 levels
	Clock generation circuits	2 circuits • Main clock oscillation circuit (with on-chip feedback resistor) • On-chip oscillator (high speed, low speed) High-speed on-chip oscillator has a frequency adjustment function
	Oscillation stop detection function	Main clock oscillation stop detection function
	Voltage detection circuit	On-chip
	Power-on reset circuit	On-chip
Electric Characteristics	Supply voltage	VCC = 3.0 to 5.5 V (f(XIN) = 20 MHz) VCC = 2.7 to 5.5 V (f(XIN) = 10 MHz)
	Current consumption	Typ. 9 mA (VCC = 5.0 V, f(XIN) = 20 MHz, A/D converter stopped) Typ. 5 mA (VCC = 3.0 V, f(XIN) = 10 MHz, A/D converter stopped) Typ. 35 μA (VCC = 3.0 V, wait mode, peripheral clock off) Typ. 0.7 μA (VCC = 3.0 V, stop mode)
Flash Memory	Programming and erasure voltage	VCC = 2.7 to 5.5 V
	Programming and erasure endurance	100 times
Operating Ambient Temperature		-20 to 85°C
		-40 to 85°C (D version)
		-20 to 105°C (Y version) (2)
Package		20-pin molded-plastic LSSOP
		20-pin molded-plastic SDIP
		28-pin molded-plastic HWQFN

NOTE:
1. I^2C bus is a trademark of Koninklijke Philips Electronics N. V.
2. Please contact Renesas Technology sales offices for the Y version.

Table 1.2 Functions and Specifications for R8C/1B Group

Item		Specification
CPU	Number of fundamental instructions	89 instructions
	Minimum instruction execution time	50 ns (f(XIN) = 20 MHz, VCC = 3.0 to 5.5 V) 100 ns (f(XIN) = 10 MHz, VCC = 2.7 to 5.5 V)
	Operating mode	Single-chip
	Address space	1 Mbyte
	Memory capacity	See **Table 1.4 Product Information for R8C/1B Group**
Peripheral Functions	Ports	I/O ports: 13 pins (including LED drive port) Input port: 3 pins
	LED drive ports	I/O ports: 4 pins
	Timers	Timer X: 8 bits × 1 channel, timer Z: 8 bits × 1 channel (Each timer equipped with 8-bit prescaler) Timer C: 16 bits × 1 channel (Input capture and output compare circuits)
	Serial interfaces	1 channel Clock synchronous serial I/O, UART 1 channel UART
	Clock synchronous serial interface	1 channel I²C bus Interface(1) Clock synchronous serial I/O with chip select (SSU)
	A/D converter	10-bit A/D converter: 1 circuit, 4 channels
	Watchdog timer	15 bits × 1 channel (with prescaler) Reset start selectable, count source protection mode
	Interrupts	Internal: 11 sources, External: 4 sources, Software: 4 sources, Priority levels: 7 levels
	Clock generation circuits	2 circuits • Main clock generation circuit (with on-chip feedback resistor) • On-chip oscillator (high speed, low speed) High-speed on-chip oscillator has a frequency adjustment function
	Oscillation stop detection function	Main clock oscillation stop detection function
	Voltage detection circuit	On-chip
	Power on reset circuit	On-chip
Electric Characteristics	Supply voltage	VCC = 3.0 to 5.5 V (f(XIN) = 20 MHz) VCC = 2.7 to 5.5 V (f(XIN) = 10 MHz)
	Current consumption	Typ. 9 mA (VCC = 5.0 V, f(XIN) = 20 MHz, A/D converter stopped) Typ. 5 mA (VCC = 3.0 V, f(XIN) = 10 MHz, A/D converter stopped) Typ. 35 μA (VCC = 3.0 V, wait mode, peripheral clock off) Typ. 0.7 μA (VCC = 3.0 V, stop mode)
Flash Memory	Programming and erasure voltage	VCC = 2.7 to 5.5 V
	Programming and erasure endurance	10,000 times (data flash) 1,000 times (program ROM)
Operating Ambient Temperature		-20 to 85°C -40 to 85°C (D version) -20 to 105°C (Y version) (2)
Package		20-pin molded-plastic LSSOP 20-pin molded-plastic SDIP 28-pin molded-plastic HWQFN

NOTE:
1. I²C bus is a trademark of Koninklijke Philips Electronics N. V.
2. Please contact Renesas Technology sales offices for the Y version.

1.3 Block Diagram

Figure 1.1 shows a Block Diagram.

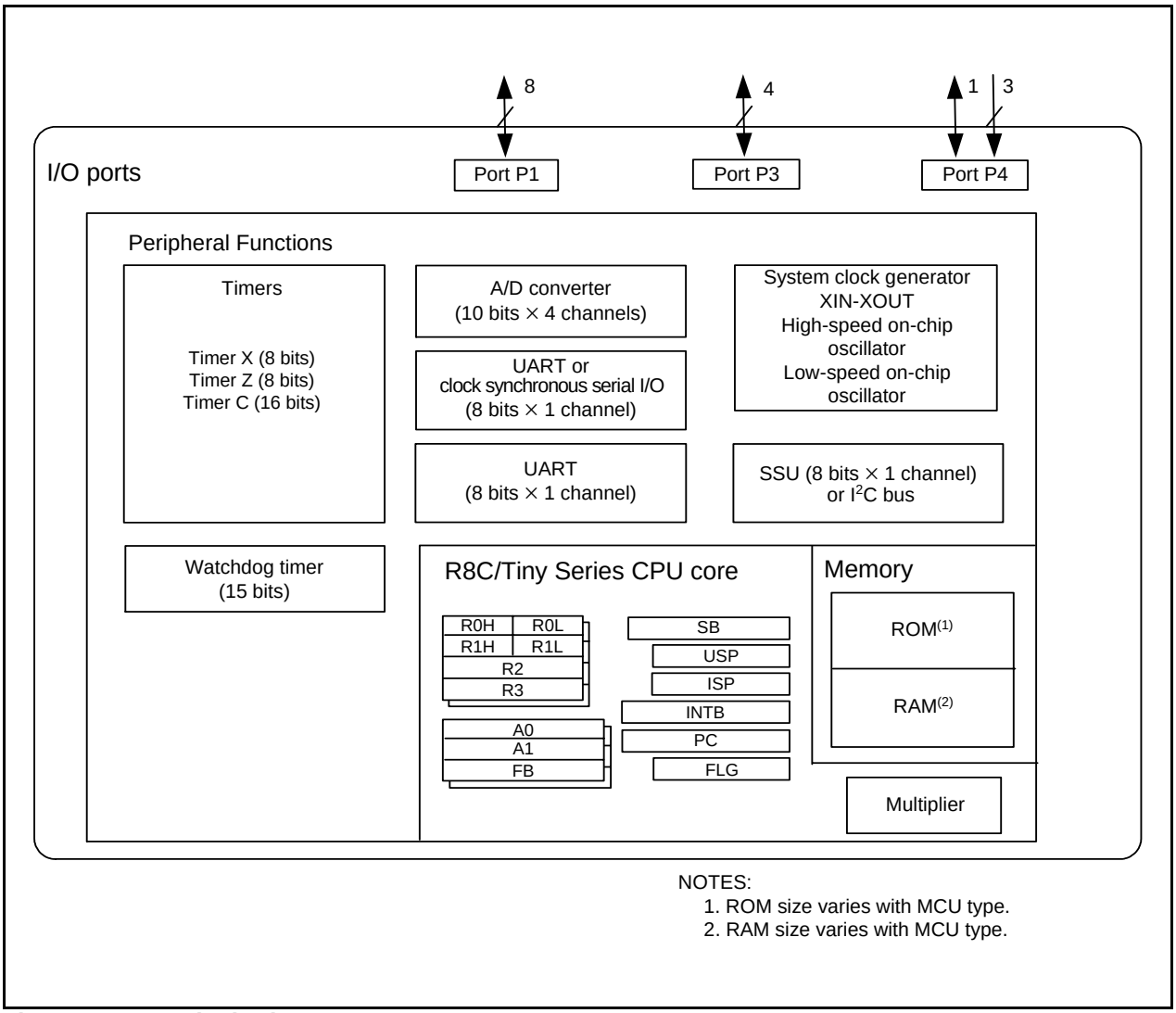

Figure 1.1 Block Diagram

1.4 Product Information

Table 1.3 lists Product Information for R8C/1A Group and Table 1.4 lists Product Information for R8C/1B Group.

Table 1.3 Product Information for R8C/1A Group Current of October 2006

Type No.	ROM Capacity	RAM Capacity	Package Type	Remarks
R5F211A1SP	4 Kbytes	384 bytes	PLSP0020JB-A	
R5F211A2SP	8 Kbytes	512 bytes	PLSP0020JB-A	
R5F211A3SP	12 Kbytes	768 bytes	PLSP0020JB-A	
R5F211A4SP	16 Kbytes	1 Kbyte	PLSP0020JB-A	
R5F211A1DSP	4 Kbytes	384 bytes	PLSP0020JB-A	D version
R5F211A2DSP	8 Kbytes	512 bytes	PLSP0020JB-A	
R5F211A3DSP	12 Kbytes	768 bytes	PLSP0020JB-A	
R5F211A4DSP	16 Kbytes	1 Kbyte	PLSP0020JB-A	
R5F211A1DD	4 Kbytes	384 bytes	PRDP0020BA-A	
R5F211A2DD	8 Kbytes	512 bytes	PRDP0020BA-A	
R5F211A3DD	12 Kbytes	768 bytes	PRDP0020BA-A	
R5F211A4DD	16 Kbytes	1 Kbyte	PRDP0020BA-A	
R5F211A2NP	8 Kbytes	512 bytes	PWQN0028KA-B	
R5F211A3NP	12 Kbytes	768 bytes	PWQN0028KA-B	
R5F211A4NP	16 Kbytes	1 Kbyte	PWQN0028KA-B	
R5F211A1XXXSP	4 Kbytes	384 bytes	PLSP0020JB-A	Factory programming product (1)
R5F211A2XXXSP	8 Kbytes	512 bytes	PLSP0020JB-A	
R5F211A3XXXSP	12 Kbytes	768 bytes	PLSP0020JB-A	
R5F211A4XXXSP	16 Kbytes	1 Kbyte	PLSP0020JB-A	
R5F211A1DXXXSP	4 Kbytes	384 bytes	PLSP0020JB-A	D version
R5F211A2DXXXSP	8 Kbytes	512 bytes	PLSP0020JB-A	
R5F211A3DXXXSP	12 Kbytes	768 bytes	PLSP0020JB-A	
R5F211A4DXXXSP	16 Kbytes	1 Kbyte	PLSP0020JB-A	
R5F211A1XXXDD	4 Kbytes	384 bytes	PRDP0020BA-A	Factory programming product (1)
R5F211A2XXXDD	8 Kbytes	512 bytes	PRDP0020BA-A	
R5F211A3XXXDD	12 Kbytes	768 bytes	PRDP0020BA-A	
R5F211A4XXXDD	16 Kbytes	1 Kbyte	PRDP0020BA-A	
R5F211A2XXXNP	8 Kbytes	512 bytes	PWQN0028KA-B	
R5F211A3XXXNP	12 Kbytes	768 bytes	PWQN0028KA-B	
R5F211A4XXXNP	16 Kbytes	1 Kbyte	PWQN0028KA-B	

NOTE:
1. The user ROM is programmed before shipment.

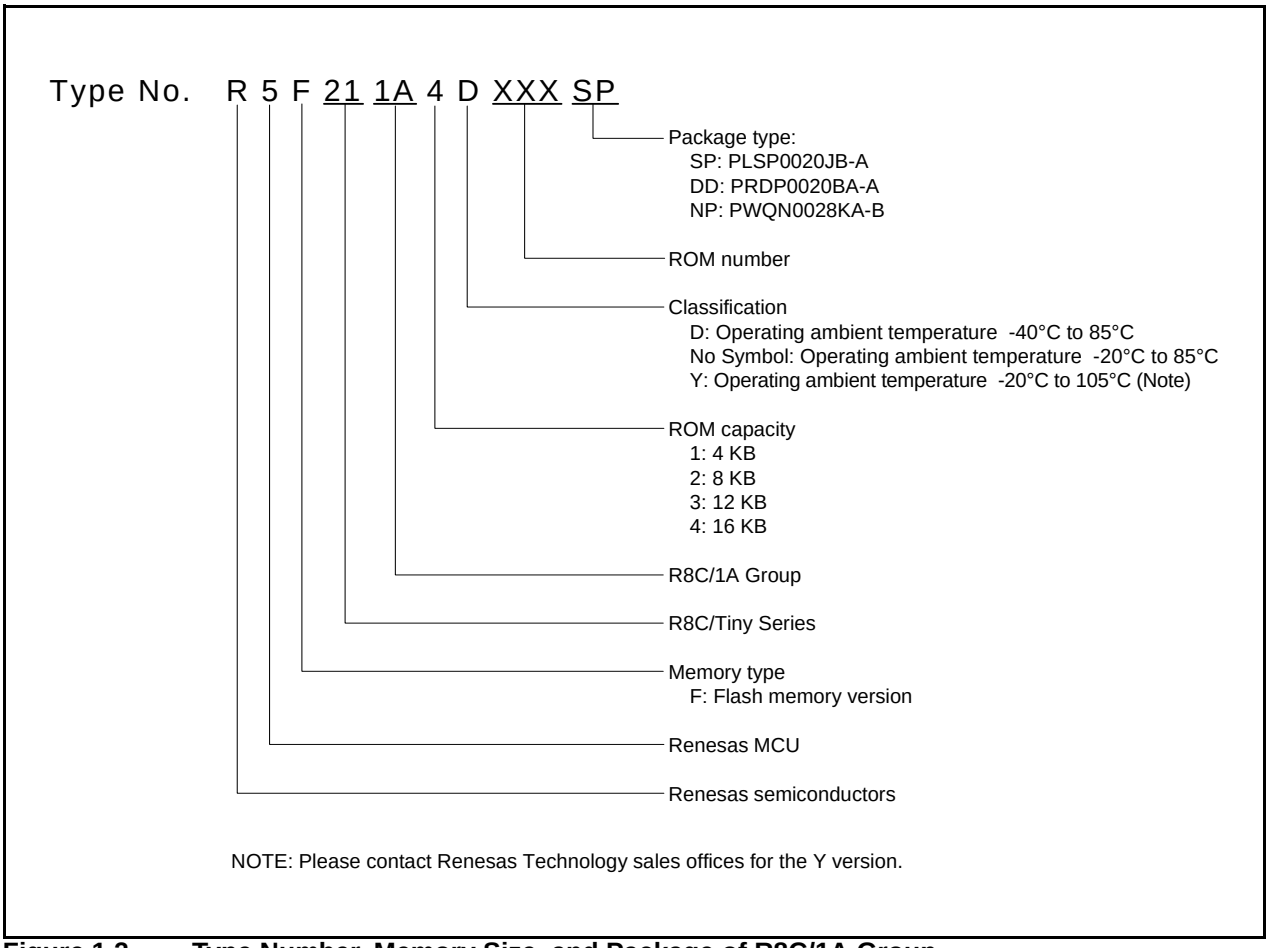

Figure 1.2 Type Number, Memory Size, and Package of R8C/1A Group

Table 1.4 Product Information for R8C/1B Group Current of October 2006

Type No.	ROM Capacity		RAM Capacity	Package Type	Remarks
	Program ROM	Data Flash			
R5F211B1SP	4 Kbytes	1 Kbyte × 2	384 bytes	PLSP0020JB-A	
R5F211B2SP	8 Kbytes	1 Kbyte × 2	512 bytes	PLSP0020JB-A	
R5F211B3SP	12 Kbytes	1 Kbyte × 2	768 bytes	PLSP0020JB-A	
R5F211B4SP	16 Kbytes	1 Kbyte × 2	1 Kbyte	PLSP0020JB-A	
R5F211B1DSP	4 Kbytes	1 Kbyte × 2	384 bytes	PLSP0020JB-A	D version
R5F211B2DSP	8 Kbytes	1 Kbyte × 2	512 bytes	PLSP0020JB-A	
R5F211B3DSP	12 Kbytes	1 Kbyte × 2	768 bytes	PLSP0020JB-A	
R5F211B4DSP	16 Kbytes	1 Kbyte × 2	1 Kbyte	PLSP0020JB-A	
R5F211B1DD	4 Kbytes	1 Kbyte × 2	384 bytes	PRDP0020BA-A	
R5F211B2DD	8 Kbytes	1 Kbyte × 2	512 bytes	PRDP0020BA-A	
R5F211B3DD	12 Kbytes	1 Kbyte × 2	768 bytes	PRDP0020BA-A	
R5F211B4DD	16 Kbytes	1 Kbyte × 2	1 Kbyte	PRDP0020BA-A	
R5F211B2NP	8 Kbytes	1 Kbyte × 2	512 bytes	PWQN0028KA-B	
R5F211B3NP	12 Kbytes	1 Kbyte × 2	768 bytes	PWQN0028KA-B	
R5F211B4NP	16 Kbytes	1 Kbyte × 2	1 Kbyte	PWQN0028KA-B	
R5F211B1XXXSP	4 Kbytes	1 Kbyte × 2	384 bytes	PLSP0020JB-A	Factory programming product (1)
R5F211B2XXXSP	8 Kbytes	1 Kbyte × 2	512 bytes	PLSP0020JB-A	
R5F211B3XXXSP	12 Kbytes	1 Kbyte × 2	768 bytes	PLSP0020JB-A	
R5F211B4XXXSP	16 Kbytes	1 Kbyte × 2	1 Kbyte	PLSP0020JB-A	
R5F211B1DXXXSP	4 Kbytes	1 Kbyte × 2	384 bytes	PLSP0020JB-A	D version
R5F211B2DXXXSP	8 Kbytes	1 Kbyte × 2	512 bytes	PLSP0020JB-A	
R5F211B3DXXXSP	12 Kbytes	1 Kbyte × 2	768 bytes	PLSP0020JB-A	
R5F211B4DXXXSP	16 Kbytes	1 Kbyte × 2	1 Kbyte	PLSP0020JB-A	
R5F211B1XXXDD	4 Kbytes	1 Kbyte × 2	384 bytes	PRDP0020BA-A	Factory programming product (1)
R5F211B2XXXDD	8 Kbytes	1 Kbyte × 2	512 bytes	PRDP0020BA-A	
R5F211B3XXXDD	12 Kbytes	1 Kbyte × 2	768 bytes	PRDP0020BA-A	
R5F211B4XXXDD	16 Kbytes	1 Kbyte × 2	1 Kbyte	PRDP0020BA-A	
R5F211B2XXXNP	8 Kbytes	1 Kbyte × 2	512 bytes	PWQN0028KA-B	
R5F211B3XXXNP	12 Kbytes	1 Kbyte × 2	768 bytes	PWQN0028KA-B	
R5F211B4XXXNP	16 Kbytes	1 Kbyte × 2	1 Kbyte	PWQN0028KA-B	

NOTE:
1. The user ROM is programmed before shipment.

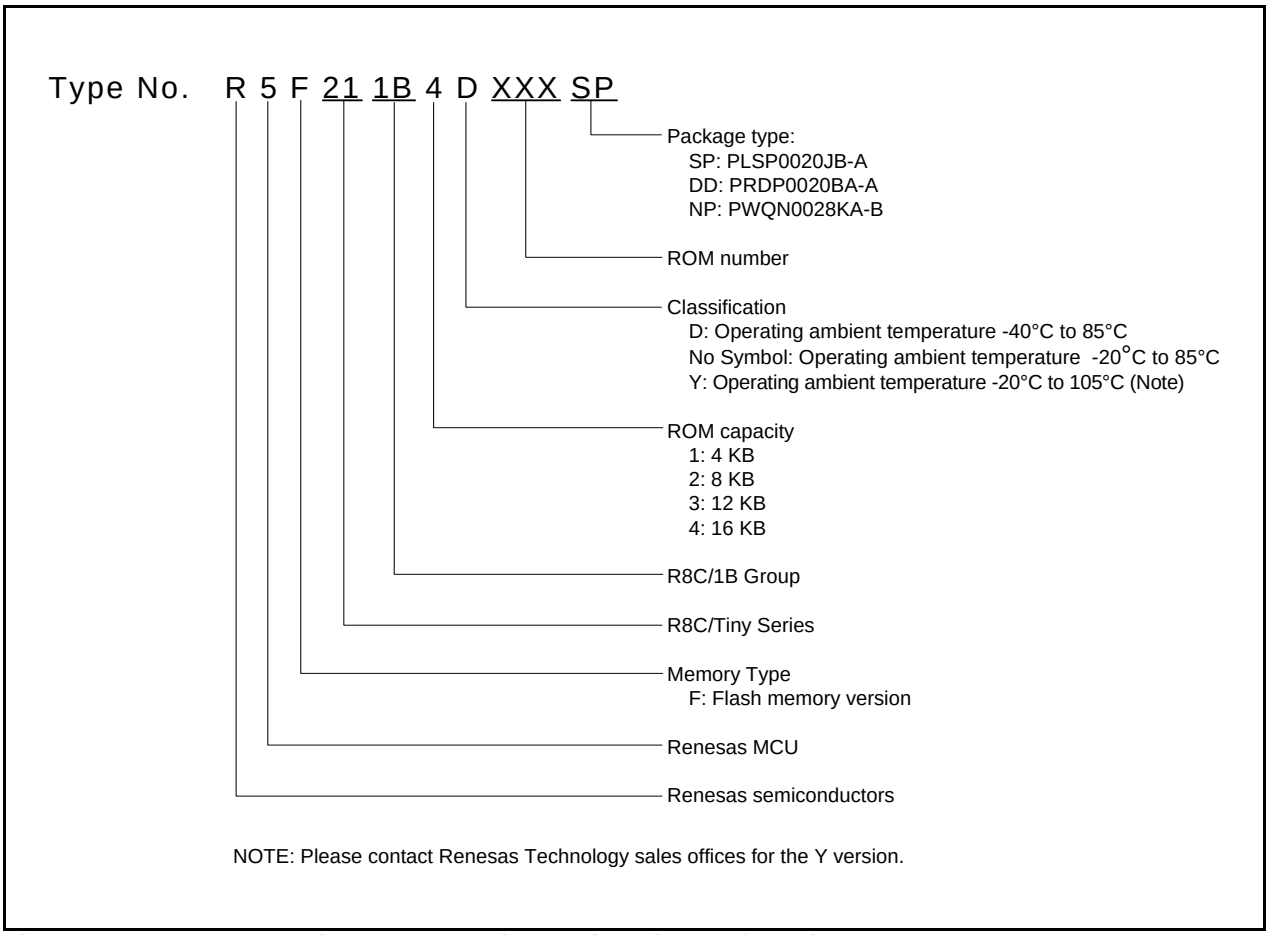

Figure 1.3 Type Number, Memory Size, and Package of R8C/1B Group

1.5 Pin Assignments

Figure 1.4 shows Pin Assignments for PLSP0020JB-A Package (Top View), Figure 1.5 shows Pin Assignments for PRDP0020BA-A Package (Top View) and Figure 1.6 shows Pin Assignments for PWQN0028KA-B Package (Top View).

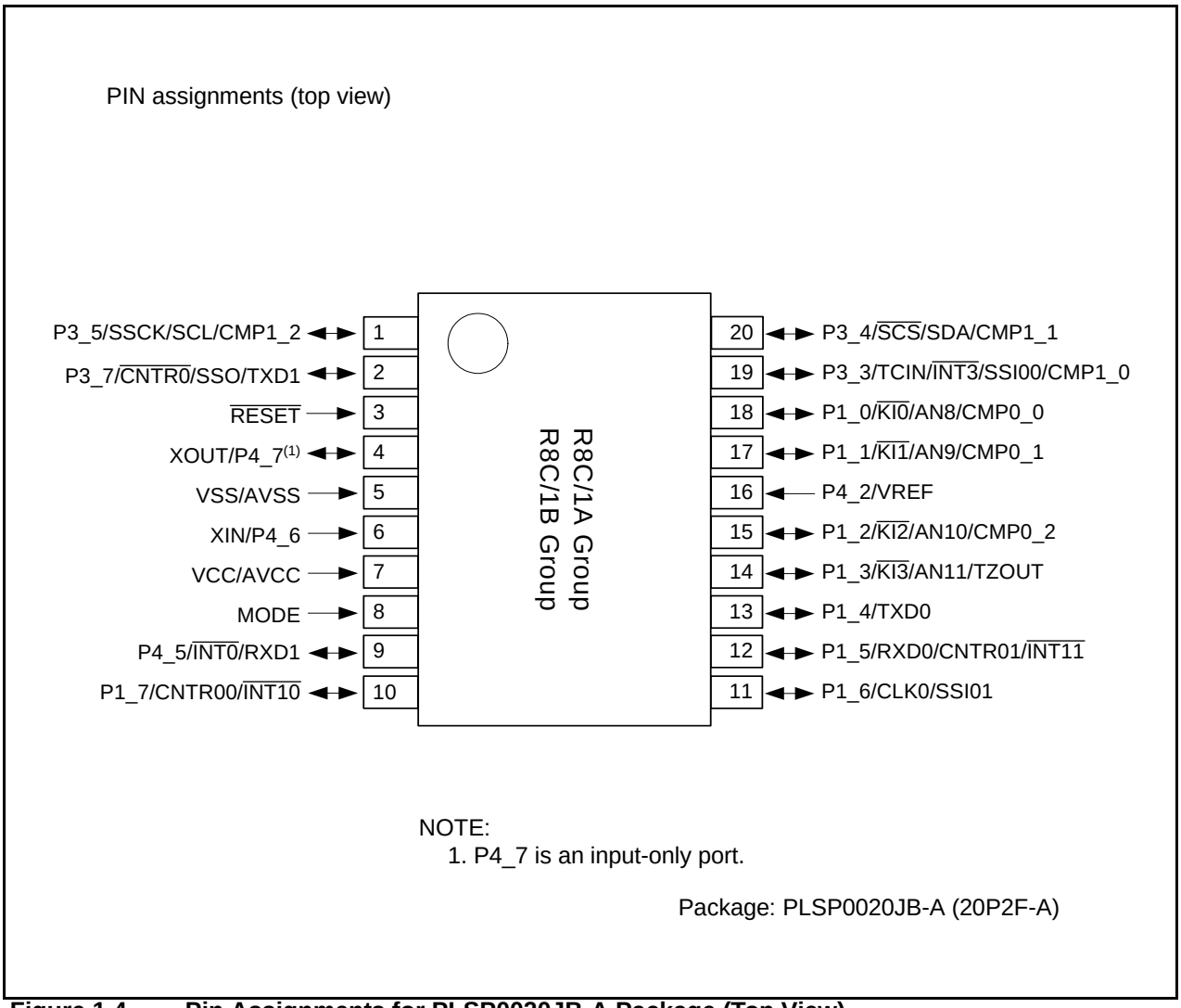

Figure 1.4 Pin Assignments for PLSP0020JB-A Package (Top View)

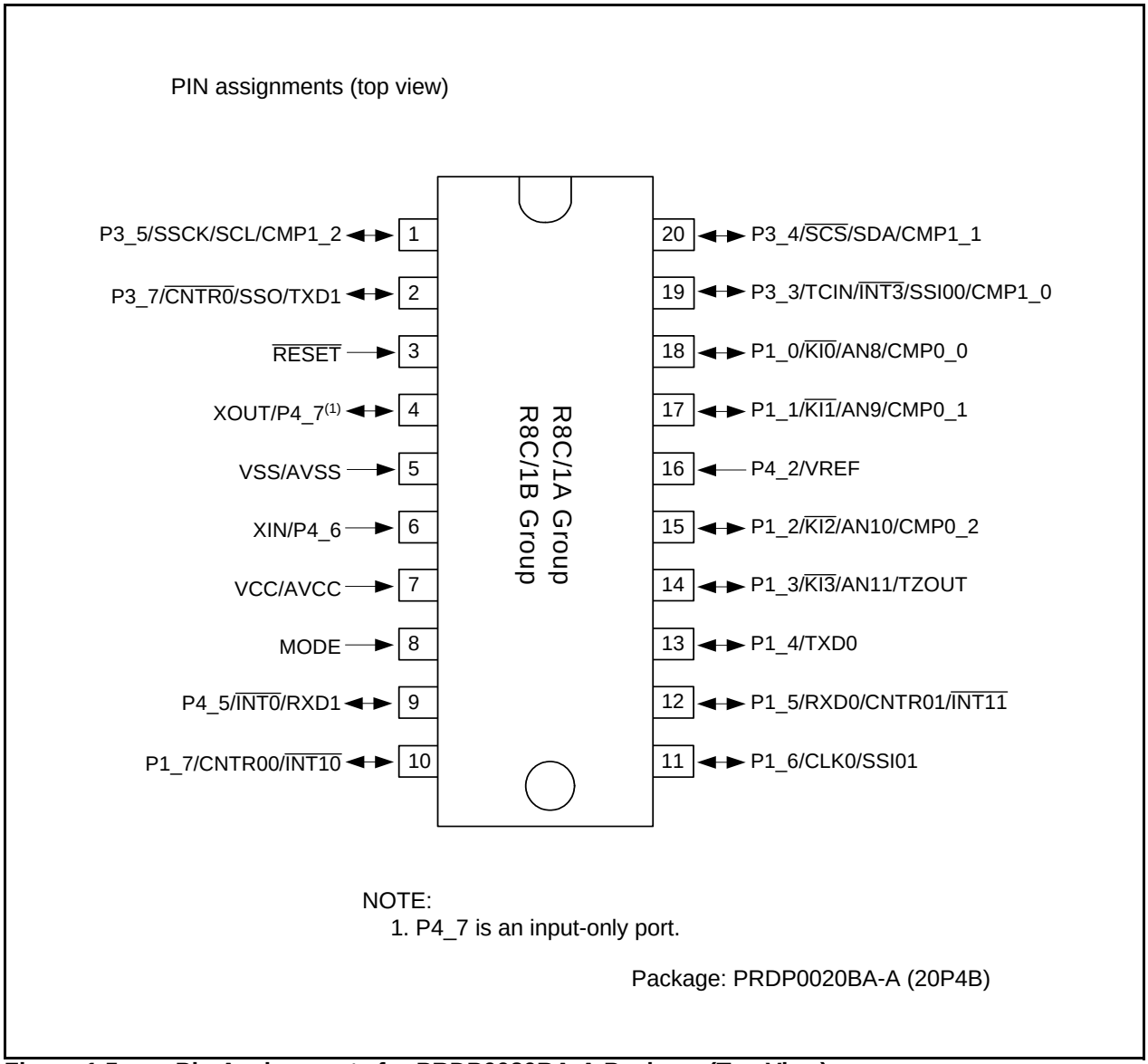

Figure 1.5 Pin Assignments for PRDP0020BA-A Package (Top View)

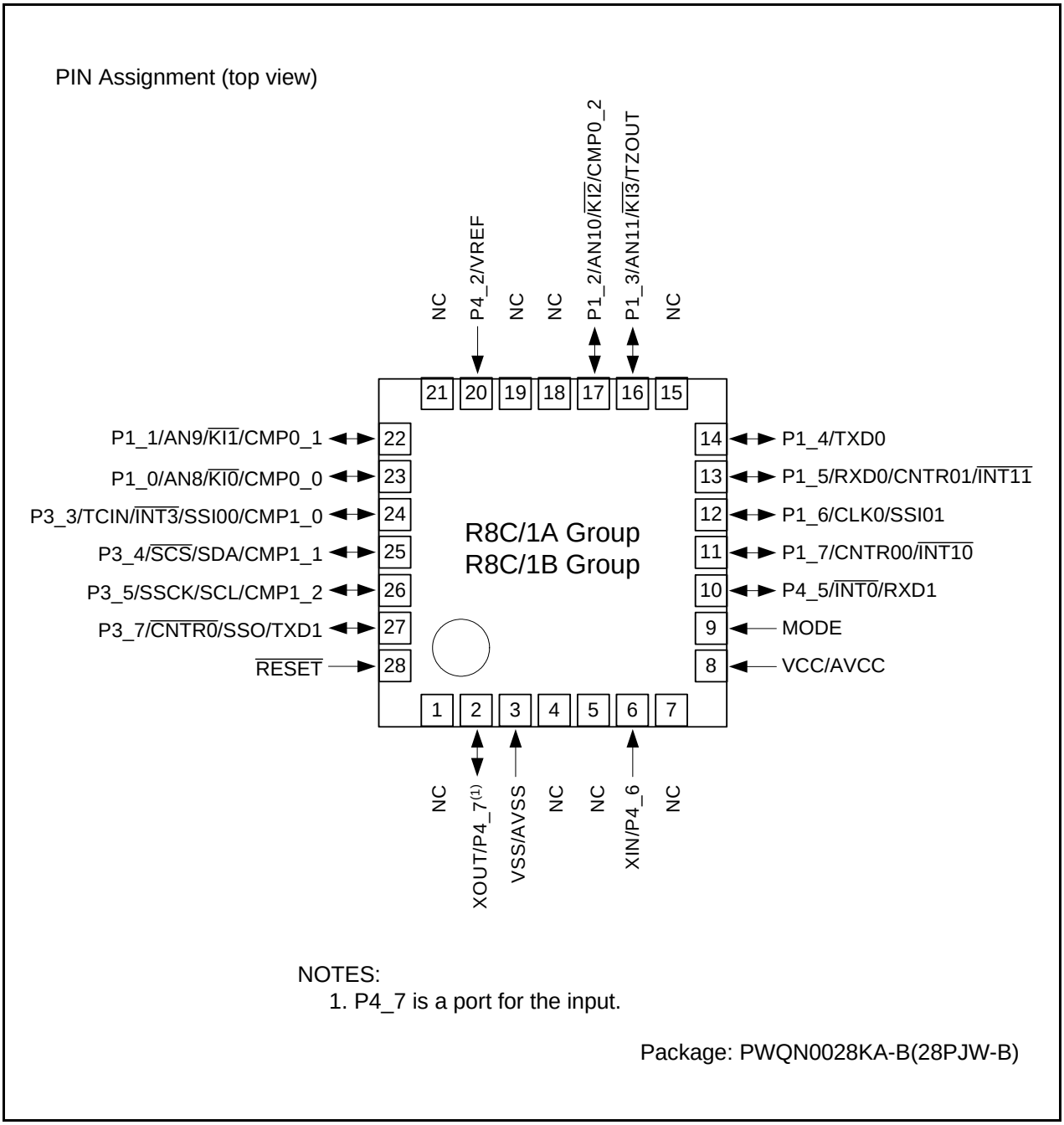

Figure 1.6 Pin Assignments for PWQN0028KA-B Package (Top View)

1.6 Pin Functions

Table 1.5 lists Pin Functions, Table 1.6 lists Pin Name Information by Pin Number of PLSP0020JB-A, PRDP0020BA-A Packages and Table 1.7 lists Pin Name Information by Pin Number of PWQN0028KA-B Package.

Table 1.5 Pin Functions

Type	Symbol	I/O Type	Description
Power Supply Input	VCC, VSS	I	Apply 2.7 V to 5.5 V to the VCC pin. Apply 0 V to the VSS pin.
Analog Power Supply Input	AVCC, AVSS	I	Power supply for the A/D converter Connect a capacitor between AVCC and AVSS.
Reset Input	$\overline{\text{RESET}}$	I	Input “L” on this pin resets the MCU.
MODE	MODE	I	Connect this pin to VCC via a resistor.
Main Clock Input	XIN	I	These pins are provided for main clock generation circuit I/O. Connect a ceramic resonator or a crystal oscillator between the XIN and XOUT pins. To use an external clock, input it to the XIN pin and leave the XOUT pin open.
Main Clock Output	XOUT	O	
$\overline{\text{INT}}$ Interrupt	$\overline{\text{INT0}}$, $\overline{\text{INT1}}$, $\overline{\text{INT3}}$	I	INT interrupt input pins
Key Input Interrupt	$\overline{\text{KI0}}$ to $\overline{\text{KI3}}$	I	Key input interrupt input pins
Timer X	CNTR0	I/O	Timer X I/O pin
	$\overline{\text{CNTR0}}$	O	Timer X output pin
Timer Z	TZOUT	O	Timer Z output pin
Timer C	TCIN	I	Timer C input pin
	CMP0_0 to CMP0_2, CMP1_0 to CMP1_2	O	Timer C output pins
Serial Interface	CLK0	I/O	Transfer clock I/O pin
	RXD0, RXD1	I	Serial data input pins
	TXD0, TXD1	O	Serial data output pins
Clock synchronous serial I/O with chip select (SSU)	SSI00, SSI01	I/O	Data I/O pin.
	$\overline{\text{SCS}}$	I/O	Chip-select signal I/O pin
	SSCK	I/O	Clock I/O pin
	SSO	I/O	Data I/O pin
I^2C bus Interface	SCL	I/O	Clock I/O pin
	SDA	I/O	Data I/O pin
Reference Voltage Input	VREF	I	Reference voltage input pin to A/D converter
A/D Converter	AN8 to AN11	I	Analog input pins to A/D converter
I/O Port	P1_0 to P1_7, P3_3 to P3_5, P3_7, P4_5	I/O	CMOS I/O ports. Each port has an I/O select direction register, allowing each pin in the port to be directed for input or output individually. Any port set to input can be set to use a pull-up resistor or not by a program. P1_0 to P1_3 also function as LED drive ports.
Input Port	P4_2, P4_6, P4_7	I	Input-only ports

I: Input O: Output I/O: Input and output

Table 1.6 Pin Name Information by Pin Number of PLSP0020JB-A, PRDP0020BA-A Packages

Pin Number	Control Pin	Port	I/O Pin Functions for Peripheral Modules					
			Interrupt	Timer	Serial Interface	Clock Synchronous Serial I/O with Chip Select	I^2C bus Interface	A/D Converter
1		P3_5		CMP1_2		SSCK	SCL	
2		P3_7		$\overline{\text{CNTR0}}$	TXD1	SSO		
3	$\overline{\text{RESET}}$							
4	XOUT	P4_7						
5	VSS/AVSS							
6	XIN	P4_6						
7	VCC/AVCC							
8	MODE							
9		P4_5	$\overline{\text{INT0}}$		RXD1			
10		P1_7	$\overline{\text{INT10}}$	CNTR00				
11		P1_6			CLK0	SSI01		
12		P1_5	$\overline{\text{INT11}}$	CNTR01	RXD0			
13		P1_4			TXD0			
14		P1_3	$\overline{\text{KI3}}$	TZOUT				AN11
15		P1_2	$\overline{\text{KI2}}$	CMP0_2				AN10
16	VREF	P4_2						
17		P1_1	$\overline{\text{KI1}}$	CMP0_1				AN9
18		P1_0	$\overline{\text{KI0}}$	CMP0_0				AN8
19		P3_3	$\overline{\text{INT3}}$	TCIN/ CMP1_0		SSI00		
20		P3_4		CMP1_1		$\overline{\text{SCS}}$	SDA	

Table 1.7 Pin Name Information by Pin Number of PWQN0028KA-B Package

Pin Number	Control Pin	Port	I/O Pin Functions for Peripheral Modules					
			Interrupt	Timer	Serial Interface	Clock Synchronous Serial I/O with Chip Select	I^2C bus Interface	A/D Converter
1	NC							
2	XOUT	P4_7						
3	VSS/AVSS							
4	NC							
5	NC							
6	XIN	P4_6						
7	NC							
8	VCC/AVCC							
9	MODE							
10		P4_5	$\overline{INT0}$		RXD1			
11		P1_7	$\overline{INT10}$	CNTR00				
12		P1_6			CLK0	SSI01		
13		P1_5	$\overline{INT11}$	CNTR01	RXD0			
14		P1_4			TXD0			
15	NC							
16		P1_3	$\overline{KI3}$	TZOUT				AN11
17		P1_2	$\overline{KI2}$	CMP0_2				AN10
18	NC							
19	NC							
20	VREF	P4_2						
21	NC							
22		P1_1	$\overline{KI1}$	CMP0_1				AN9
23		P1_0	$\overline{KI0}$	CMP0_0				AN8
24		P3_3	$\overline{INT3}$	TCIN/CMP1_0		SSI00		
25		P3_4		CMP1_1		$\overline{SCS}$	SDA	
26		P3_5		CMP1_2		SSCK	SCL	
27		P3_7		$\overline{CNTR0}$	TXD1	SSO		
28	$\overline{RESET}$							

2. Central Processing Unit (CPU)

Figure 2.1 shows the CPU Registers. The CPU contains 13 registers. R0, R1, R2, R3, A0, A1, and FB configure a register bank. There are two sets of register bank.

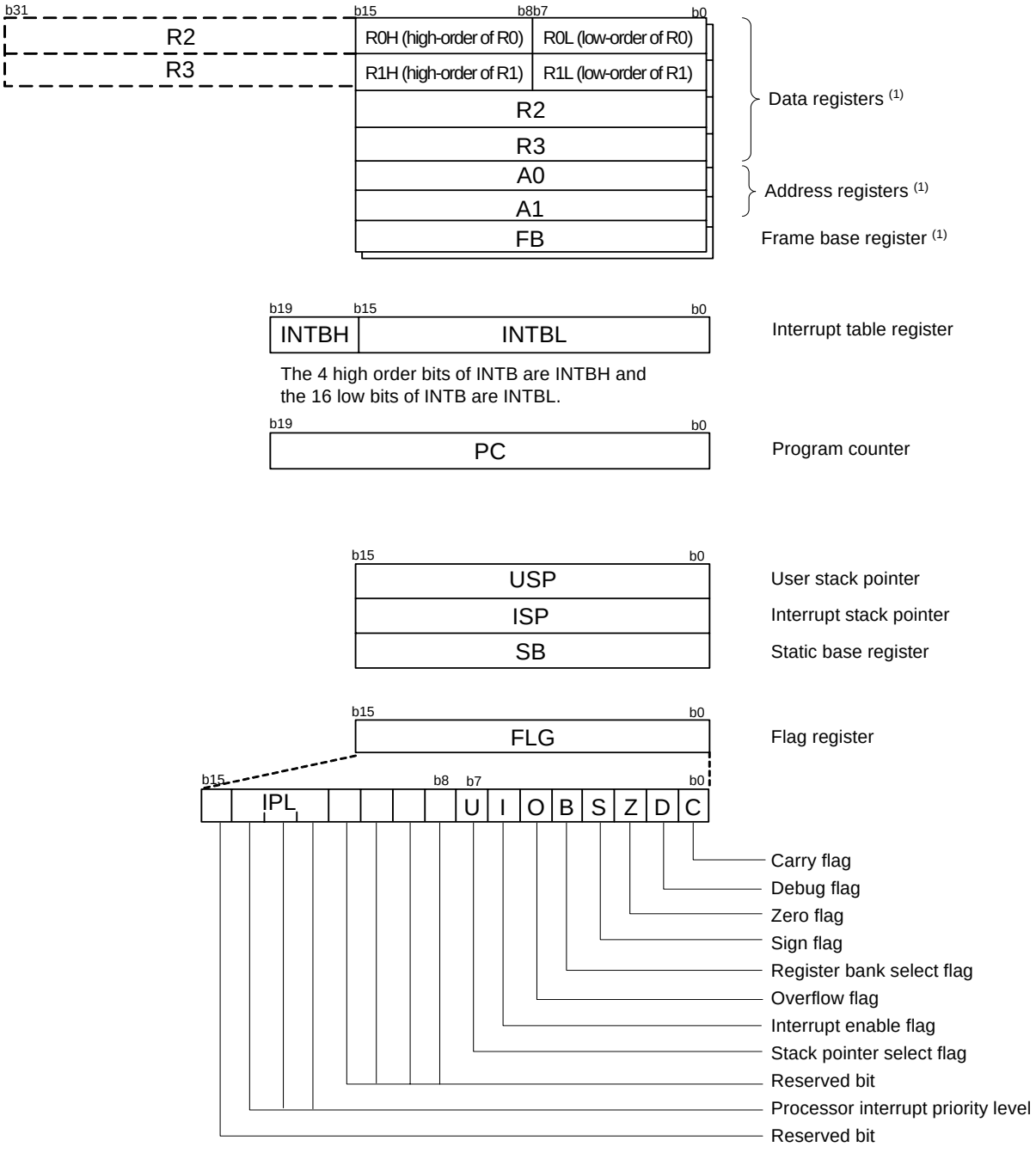

NOTE:
1. These registers comprise a register bank. There are two register banks.

Figure 2.1 CPU Register

2.1 Data Registers (R0, R1, R2, and R3)

R0 is a 16-bit register for transfer, arithmetic, and logic operations. The same applies to R1 to R3. R0 can be split into high-order bits (R0H) and low-order bits (R0L) to be used separately as 8-bit data registers. R1H and R1L are analogous to R0H and R0L. R2 can be combined with R0 and used as a 32-bit data register (R2R0). R3R1 is analogous to R2R0.

2.2 Address Registers (A0 and A1)

A0 is a 16-bit register for address register indirect addressing and address register relative addressing. It is also used for transfer and arithmetic and logic operations. A1 is analogous to A0. A1 can be combined with A0 and used as a 32-bit address register (A1A0).

2.3 Frame Base Register (FB)

FB is a 16-bit register for FB relative addressing.

2.4 Interrupt Table Register (INTB)

INTB is a 20-bit register that indicates the start address of an interrupt vector table.

2.5 Program Counter (PC)

PC is 20 bits wide indicates the address of the next instruction to be executed.

2.6 User Stack Pointer (USP) and Interrupt Stack Pointer (ISP)

The stack pointer (SP), USP, and ISP, are each 16 bits wide. The U flag of FLG is used to switch between USP and ISP.

2.7 Static Base Register (SB)

SB is a 16-bit register for SB relative addressing.

2.8 Flag Register (FLG)

FLG is an 11-bit register indicating the CPU state.

2.8.1 Carry Flag (C)

The C flag retains a carry, borrow, or shift-out bits that have been generated by the arithmetic and logic unit.

2.8.2 Debug Flag (D)

The D flag is for debugging only. Set it to 0.

2.8.3 Zero Flag (Z)

The Z flag is set to 1 when an arithmetic operation results in 0; otherwise to 0.

2.8.4 Sign Flag (S)

The S flag is set to 1 when an arithmetic operation results in a negative value; otherwise to 0.

2.8.5 Register Bank Select Flag (B)

Register bank 0 is selected when the B flag is 0. Register bank 1 is selected when this flag is set to 1.

2.8.6 Overflow Flag (O)

The O flag is set to 1 when the operation results in an overflow; otherwise to 0.

2.8.7 Interrupt Enable Flag (I)

The I flag enables maskable interrupts.
Interrupts are disabled when the I flag is set to 0, and are enabled when the I flag is set to 1. The I flag is set to 0 when an interrupt request is acknowledged.

2.8.8 Stack Pointer Select Flag (U)

ISP is selected when the U flag is set to 0; USP is selected when the U flag is set to 1.
The U flag is set to 0 when a hardware interrupt request is acknowledged or the INT instruction of software interrupt numbers 0 to 31 is executed.

2.8.9 Processor Interrupt Priority Level (IPL)

IPL is 3 bits wide, assigns processor interrupt priority levels from level 0 to level 7.
If a requested interrupt has higher priority than IPL, the interrupt is enabled.

2.8.10 Reserved Bit

If necessary, set to 0. When read, the content is undefined.

3. Memory

3.1 R8C/1A Group

Figure 3.1 is a Memory Map of R8C/1A Group. The R8C/1A Group has 1 Mbyte of address space from addresses 00000h to FFFFFh.
The internal ROM is allocated lower addresses, beginning with address 0FFFFh. For example, a 16-Kbyte internal ROM area is allocated addresses 0C000h to 0FFFFh.
The fixed interrupt vector table is allocated addresses 0FFDCh to 0FFFFh. They store the starting address of each interrupt routine.
The internal RAM is allocated higher addresses, beginning with address 00400h. For example, a 1-Kbyte internal RAM area is allocated addresses 00400h to 007FFh. The internal RAM is used not only for storing data but also for calling subroutines and as stacks when interrupt requests are acknowledged.
Special function registers (SFRs) are allocated addresses 00000h to 002FFh. The peripheral function control registers are allocated here. All addresses within the SFR, which have nothing allocated are reserved for future use and cannot be accessed by users.

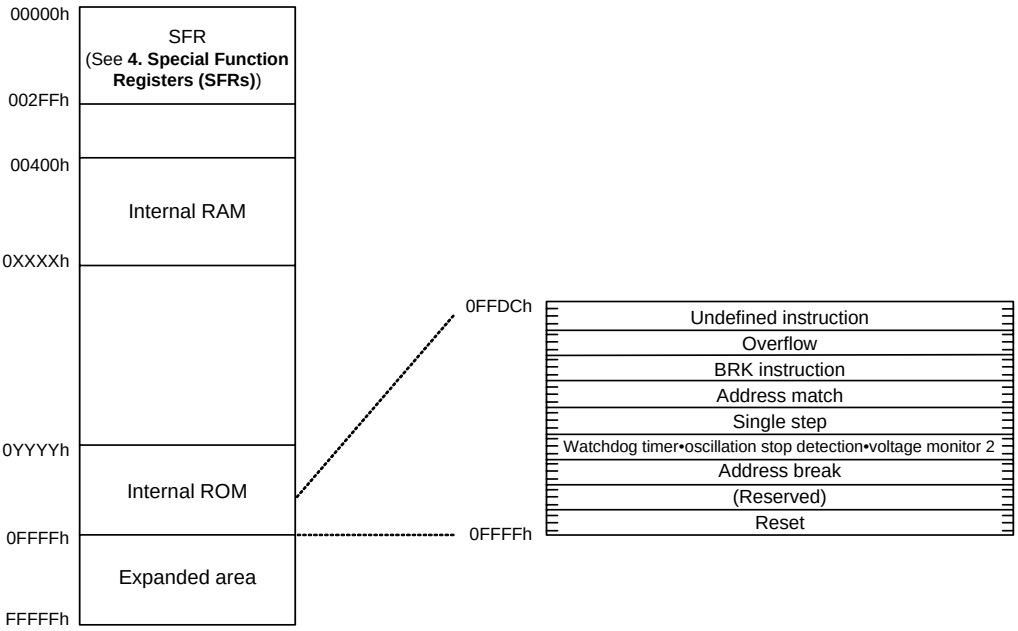

NOTE:
1. The blank regions are reserved. Do not access locations in these regions.

Part Number	Internal ROM		Internal RAM	
	Size	Address 0YYYYh	Size	Address 0XXXXh
R5F211A4SP, R5F211A4DSP, R5F211A4DD, R5F211A4NP, R5F211A4XXXSP, R5F211A4DXXXSP, R5F211A4XXXDD, R5F211A4XXXNP	16 Kbytes	0C000h	1 Kbyte	007FFh
R5F211A3SP, R5F211A3DSP, R5F211A3DD, R5F211A3NP, R5F211A3XXXSP, R5F211A3DXXXSP, R5F211A3XXXDD, R5F211A3XXXNP	12 Kbytes	0D000h	768 bytes	006FFh
R5F211A2SP, R5F211A2DSP, R5F211A2DD, R5F211A2NP, R5F211A2XXXSP, R5F211A2DXXXSP, R5F211A2XXXDD, R5F211A2XXXNP	8 Kbytes	0E000h	512 bytes	005FFh
R5F211A1SP, R5F211A1DSP, R5F211A1DD, R5F211A1XXXSP, R5F211A1DXXXSP, R5F211A1XXXDD	4 Kbytes	0F000h	384 bytes	0057Fh

Figure 3.1 Memory Map of R8C/1A Group

3.2 R8C/1B Group

Figure 3.2 is a Memory Map of R8C/1B Group. The R8C/1B Group has 1 Mbyte of address space from addresses 00000h to FFFFFh.
The internal ROM (program ROM) is allocated lower addresses, beginning with address 0FFFFh. For example, a 16-Kbyte internal ROM area is allocated addresses 0C000h to 0FFFFh.
The fixed interrupt vector table is allocated addresses 0FFDCh to 0FFFFh. They store the starting address of each interrupt routine.
The internal ROM (data flash) is allocated addresses 02400h to 02BFFh.
The internal RAM is allocated higher addresses beginning with address 00400h. For example, a 1-Kbyte internal RAM area is allocated addresses 00400h to 007FFh. The internal RAM is used not only for storing data but also for calling subroutines and as stacks when interrupt requests are acknowledged.
Special function registers (SFRs) are allocated addresses 00000h to 002FFh. The peripheral function control registers are allocated here. All addresses within the SFR, which have nothing allocated are reserved for future use and cannot be accessed by users.

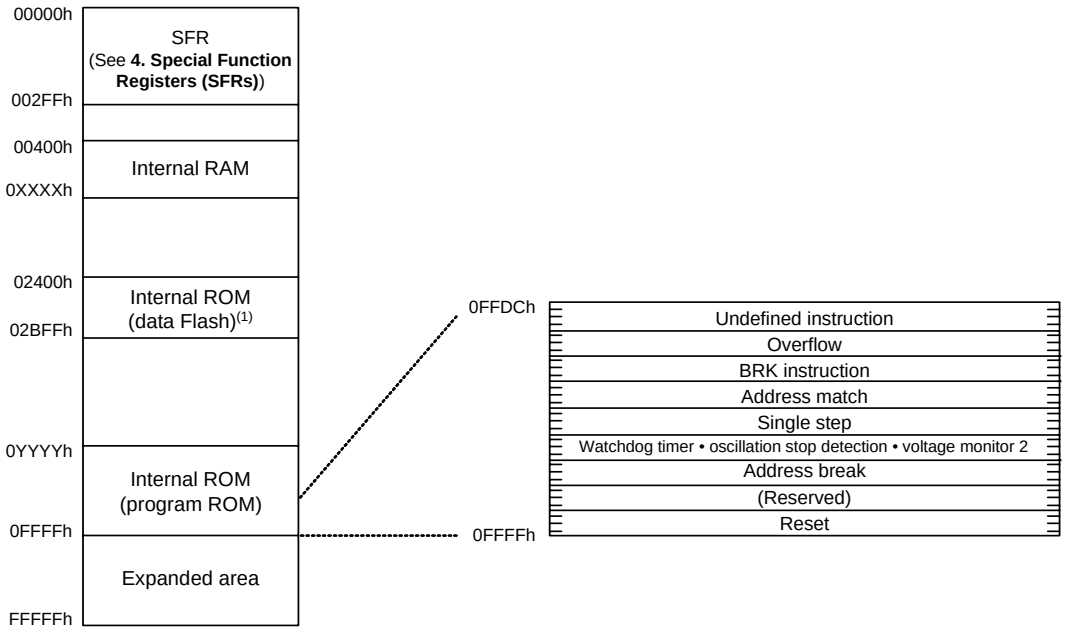

NOTES:
1. Data flash block A (1 Kbyte) and B (1 Kbyte) are shown.
2. The blank regions are reserved. Do not access locations in these regions.

Part Number	Internal ROM		Internal RAM	
	Size	Address 0YYYYh	Size	Address 0XXXXh
R5F211B4SP, R5F211B4DSP, R5F211B4DD, R5F211B4NP, R5F211B4XXXSP, R5F211B4DXXXSP, R5F211B4XXXDD, R5F211B4XXXNP	16 Kbytes	0C000h	1 Kbyte	007FFh
R5F211B3SP, R5F211B3DSP, R5F211B3DD, R5F211B3NP, R5F211B3XXXSP, R5F211B3DXXXSP, R5F211B3XXXDD, R5F211B3XXXNP	12 Kbytes	0D000h	768 bytes	006FFh
R5F211B2SP, R5F211B2DSP, R5F211B2DD, R5F211B2NP, R5F211B2XXXSP, R5F211B2DXXXSP, R5F211B2XXXDD, R5F211B2XXXNP	8 Kbytes	0E000h	512 bytes	005FFh
R5F211B1SP, R5F211B1DSP, R5F211B1DD, R5F211B1XXXSP, R5F211B1DXXXSP, R5F211B1XXXDD	4 Kbytes	0F000h	384 bytes	0057Fh

Figure 3.2 Memory Map of R8C/1B Group

4. Special Function Registers (SFRs)

An SFR (special function register) is a control register for a peripheral function. Tables 4.1 to 4.4 list the special function registers.

Table 4.1 SFR Information (1)[1]

Address	Register	Symbol	After reset
0000h			
0001h			
0002h			
0003h			
0004h	Processor Mode Register 0	PM0	00h
0005h	Processor Mode Register 1	PM1	00h
0006h	System Clock Control Register 0	CM0	01101000b
0007h	System Clock Control Register 1	CM1	00100000b
0008h			
0009h	Address Match Interrupt Enable Register	AIER	00h
000Ah	Protect Register	PRCR	00h
000Bh			
000Ch	Oscillation Stop Detection Register	OCD	00000100b
000Dh	Watchdog Timer Reset Register	WDTR	XXh
000Eh	Watchdog Timer Start Register	WDTS	XXh
000Fh	Watchdog Timer Control Register	WDC	00X11111b
0010h	Address Match Interrupt Register 0	RMAD0	00h
0011h			00h
0012h			X0h
0013h			
0014h	Address Match Interrupt Register 1	RMAD1	00h
0015h			00h
0016h			X0h
0017h			
0018h			
0019h			
001Ah			
001Bh			
001Ch	Count Source Protection Mode Register	CSPR	00h
001Dh			
001Eh	$\overline{\text{INT0}}$ Input Filter Select Register	INT0F	00h
001Fh			
0020h	High-Speed On-Chip Oscillator Control Register 0	HRA0	00h
0021h	High-Speed On-Chip Oscillator Control Register 1	HRA1	When shipping
0022h	High-Speed On-Chip Oscillator Control Register 2	HRA2	00h
0023h			
002Ah			
002Bh			
002Ch			
002Dh			
002Eh			
002Fh			
0030h			
0031h	Voltage Detection Register 1[2]	VCA1	00001000b
0032h	Voltage Detection Register 2[2]	VCA2	00h[3] 01000000b[4]
0033h			
0034h			
0035h			
0036h	Voltage Monitor 1 Circuit Control Register [2]	VW1C	0000X000b[3] 0100X001b[4]
0037h	Voltage Monitor 2 Circuit Control Register [5]	VW2C	00h
0038h			
0039h			
003Ah			
003Bh			
003Ch			
003Dh			
003Eh			
003Fh			

X: Undefined

NOTES:

1. The blank regions are reserved. Do not access locations in these regions.
2. Software reset, watchdog timer reset, and voltage monitor 2 reset do not affect this register.
3. After hardware reset.
4. After power-on reset or voltage monitor 1 reset.
5. Software reset, watchdog timer reset, and voltage monitor 2 reset do not affect b2 and b3.

Table 4.2 SFR Information (2)[1]

Address	Register	Symbol	After reset
0040h			
0041h			
0042h			
0043h			
0044h			
0045h			
0046h			
0047h			
0048h			
0049h			
004Ah			
004Bh			
004Ch			
004Dh	Key Input Interrupt Control Register	KUPIC	XXXXX000b
004Eh	A/D Conversion Interrupt Control Register	ADIC	XXXXX000b
004Fh	SSU/IIC Interrupt Control Register[2]	SSUAIC/IIC2AIC	XXXXX000b
0050h	Compare 1 Interrupt Control Register	CMP1IC	XXXXX000b
0051h	UART0 Transmit Interrupt Control Register	S0TIC	XXXXX000b
0052h	UART0 Receive Interrupt Control Register	S0RIC	XXXXX000b
0053h	UART1 Transmit Interrupt Control Register	S1TIC	XXXXX000b
0054h	UART1 Receive Interrupt Control Register	S1RIC	XXXXX000b
0055h			
0056h	Timer X Interrupt Control Register	TXIC	XXXXX000b
0057h			
0058h	Timer Z Interrupt Control Register	TZIC	XXXXX000b
0059h	INT1 Interrupt Control Register	INT1IC	XXXXX000b
005Ah	INT3 Interrupt Control Register	INT3IC	XXXXX000b
005Bh	Timer C Interrupt Control Register	TCIC	XXXXX000b
005Ch	Compare 0 Interrupt Control Register	CMP0IC	XXXXX000b
005Dh	INT0 Interrupt Control Register	INT0IC	XX00X000b
005Eh			
005Fh			
0060h			
0061h			
0062h			
0063h			
0064h			
0065h			
0066h			
0067h			
0068h			
0069h			
006Ah			
006Bh			
006Ch			
006Dh			
006Eh			
006Fh			
0070h			
0071h			
0072h			
0073h			
0074h			
0075h			
0076h			
0077h			
0078h			
0079h			
007Ah			
007Bh			
007Ch			
007Dh			
007Eh			
007Fh			

X: Undefined

NOTES:

1. The blank regions are reserved. Do not access locations in these regions.
2. Selected by the IICSEL bit in the PMR register.

Table 4.3 SFR Information (3)(1)

Address	Register	Symbol	After reset
0080h	Timer Z Mode Register	TZMR	00h
0081h			
0082h			
0083h			
0084h	Timer Z Waveform Output Control Register	PUM	00h
0085h	Prescaler Z Register	PREZ	FFh
0086h	Timer Z Secondary Register	TZSC	FFh
0087h	Timer Z Primary Register	TZPR	FFh
0088h			
0089h			
008Ah	Timer Z Output Control Register	TZOC	00h
008Bh	Timer X Mode Register	TXMR	00h
008Ch	Prescaler X Register	PREX	FFh
008Dh	Timer X Register	TX	FFh
008Eh	Timer Count Source Setting Register	TCSS	00h
008Fh			
0090h	Timer C Register	TC	00h
0091h			00h
0092h			
0093h			
0094h			
0095h			
0096h	External Input Enable Register	INTEN	00h
0097h			
0098h	Key Input Enable Register	KIEN	00h
0099h			
009Ah	Timer C Control Register 0	TCC0	00h
009Bh	Timer C Control Register 1	TCC1	00h
009Ch	Capture, Compare 0 Register	TM0	0000h(2)
009Dh			FFFFh(3)
009Eh	Compare 1 Register	TM1	FFh
009Fh			FFh
00A0h	UART0 Transmit/Receive Mode Register	U0MR	00h
00A1h	UART0 Bit Rate Generator	U0BRG	XXh
00A2h	UART0 Transmit Buffer Register	U0TB	XXh
00A3h			XXh
00A4h	UART0 Transmit/Receive Control Register 0	U0C0	00001000b
00A5h	UART0 Transmit/Receive Control Register 1	U0C1	00000010b
00A6h	UART0 Receive Buffer Register	U0RB	XXh
00A7h			XXh
00A8h	UART1 Transmit/Receive Mode Register	U1MR	00h
00A9h	UART1 Bit Rate Generator	U1BRG	XXh
00AAh	UART1 Transmit Buffer Register	U1TB	XXh
00ABh			XXh
00ACh	UART1 Transmit/Receive Control Register 0	U1C0	00001000b
00ADh	UART1 Transmit/Receive Control Register 1	U1C1	00000010b
00AEh	UART1 Receive Buffer Register	U1RB	XXh
00AFh			XXh
00B0h	UART Transmit/Receive Control Register 2	UCON	00h
00B1h			
00B2h			
00B3h			
00B4h			
00B5h			
00B6h			
00B7h			
00B8h	SS Control Register H / IIC bus Control Register 1(4)	SSCRH / ICCR1	00h
00B9h	SS Control Register L / IIC bus Control Register 2(4)	SSCRL / ICCR2	01111101b
00BAh	SS Mode Register / IIC bus Mode Register(4)	SSMR / ICMR	00011000b
00BBh	SS Enable Register / IIC bus Interrupt Enable Register(4)	SSER / ICIER	00h
00BCh	SS Status Register / IIC bus Status Register(4)	SSSR / ICSR	00h / 0000X000b
00BDh	SS Mode Register 2 / Slave Address Register(4)	SSMR2 / SAR	00h
00BEh	SS Transmit Data Register / IIC bus Transmit Data Register(4)	SSTDR / ICDRT	FFh
00BFh	SS Receive Data Register / IIC bus Receive Data Register(4)	SSRDR / ICDRR	FFh

X: Undefined

NOTES:

1. The blank regions are reserved. Do not access locations in these regions.
2. In input capture mode.
3. In output compare mode.
4. Selected by the IICSEL bit in the PMR register.

Table 4.4 SFR Information (4)(1)

Address	Register	Symbol	After reset
00C0h	A/D Register	AD	XXh
00C1h			XXh
00C2h			
00C3h			
00C4h			
00C5h			
00C6h			
00C7h			
00C8h			
00C9h			
00CAh			
00CBh			
00CCh			
00CDh			
00CEh			
00CFh			
00D0h			
00D1h			
00D2h			
00D3h			
00D4h	A/D Control Register 2	ADCON2	00h
00D5h			
00D6h	A/D Control Register 0	ADCON0	00000XXXb
00D7h	A/D Control Register 1	ADCON1	00h
00D8h			
00D9h			
00DAh			
00DBh			
00DCh			
00DDh			
00DEh			
00DFh			
00E0h			
00E1h	Port P1 Register	P1	XXh
00E2h			
00E3h	Port P1 Direction Register	PD1	00h
00E4h			
00E5h	Port P3 Register	P3	XXh
00E6h			
00E7h	Port P3 Direction Register	PD3	00h
00E8h	Port P4 Register	P4	XXh
00E9h			
00EAh	Port P4 Direction Register	PD4	00h
00EBh			
00ECh			
00EDh			
00EEh			
00EFh			
00F0h			
00F1h			
00F2h			
00F3h			
00F4h			
00F5h			
00F6h			
00F7h			
00F8h	Port Mode Register	PMR	00h
00F9h			
00FAh			
00FBh			
00FCh	Pull-Up Control Register 0	PUR0	00XX0000b
00FDh	Pull-Up Control Register 1	PUR1	XXXXXX0Xb
00FEh	Port P1 Drive Capacity Control Register	DRR	00h
00FFh	Timer C Output Control Register	TCOUT	00h
01B3h	Flash Memory Control Register 4	FMR4	01000000b
01B4h			
01B5h	Flash Memory Control Register 1	FMR1	1000000Xb
01B6h			
01B7h	Flash Memory Control Register 0	FMR0	00000001b
0FFFFh	Optional Function Select Register	OFS	(2)

X: Undefined

NOTES:

1. Blank regions, 0100h to 01B2h and 01B8h to 02FFh are all reserved. Do not access locations in these regions.
2. The OFS register cannot be changed by a user program. Use a flash programmer to write to it.

5. Electrical Characteristics

Please contact Renesas Technology sales offices for the electrical characteristics in the Y version (Topr = -20°C to 105°C).

Table 5.1 Absolute Maximum Ratings

Symbol	Parameter	Condition	Rated Value	Unit
V_{CC}	Supply voltage	V_{CC} = AV_{CC}	-0.3 to 6.5	V
AV_{CC}	Analog supply voltage	V_{CC} = AV_{CC}	-0.3 to 6.5	V
V_I	Input voltage		-0.3 to V_{CC}+0.3	V
V_O	Output voltage		-0.3 to V_{CC}+0.3	V
P_d	Power dissipation	T_{opr} = 25°C	300	mW
T_{opr}	Operating ambient temperature		-20 to 85 / -40 to 85 (D version)	°C
T_{stg}	Storage temperature		-65 to 150	°C

Table 5.2 Recommended Operating Conditions

Symbol	Parameter		Conditions	Standard			Unit
				Min.	Typ.	Max.	
V_{CC}	Supply voltage			2.7	–	5.5	V
AV_{CC}	Analog supply voltage			–	V_{CC}	–	V
V_{SS}	Supply voltage			–	0	–	V
AV_{SS}	Analog supply voltage			–	0	–	V
V_{IH}	Input “H” voltage			0.8V_{CC}	–	V_{CC}	V
V_{IL}	Input “L” voltage			0	–	0.2V_{CC}	V
$I_{OH(sum)}$	Peak sum output “H” current	Sum of all pins $I_{OH\ (peak)}$		–	–	-60	mA
$I_{OH(peak)}$	Peak output “H” current			–	–	-10	mA
$I_{OH(avg)}$	Average output “H” current			–	–	-5	mA
$I_{OL(sum)}$	Peak sum output “L” currents	Sum of all pins $I_{OL\ (peak)}$		–	–	60	mA
$I_{OL(peak)}$	Peak output “L” currents	Except P1_0 to P1_3		–	–	10	mA
		P1_0 to P1_3	Drive capacity HIGH	–	–	30	mA
			Drive capacity LOW	–	–	10	mA
$I_{OL(avg)}$	Average output “L” current	Except P1_0 to P1_3		–	–	5	mA
		P1_0 to P1_3	Drive capacity HIGH	–	–	15	mA
			Drive capacity LOW	–	–	5	mA
$f_{(XIN)}$	Main clock input oscillation frequency		3.0 V ≤ V_{CC} ≤ 5.5 V	0	–	20	MHz
			2.7 V ≤ V_{CC} < 3.0 V	0	–	10	MHz
–	System clock	OCD2 = 0 Main clock selected	3.0 V ≤ V_{CC} ≤ 5.5 V	0	–	20	MHz
			2.7 V ≤ V_{CC} < 3.0 V	0	–	10	MHz
		OCD2 = 1 On-chip oscillator clock selected	HRA01 = 0 Low-speed on-chip oscillator clock selected	–	125	–	kHz
			HRA01 = 1 High-speed on-chip oscillator clock selected	–	8	–	MHz

NOTES:
1. V_{CC} = 2.7 to 5.5 V at T_{opr} = -20 to 85 °C / -40 to 85 °C, unless otherwise specified.
2. Typical values when average output current is 100 ms.

Table 5.3 A/D Converter Characteristics

Symbol	Parameter		Conditions	Standard			Unit
				Min.	Typ.	Max.	
–	Resolution		V_{ref} = V_{CC}	–	–	10	Bits
–	Absolute accuracy	10-bit mode	ϕ_{AD} = 10 MHz, V_{ref} = V_{CC} = 5.0 V	–	–	±3	LSB
		8-bit mode	ϕ_{AD} = 10 MHz, V_{ref} = V_{CC} = 5.0 V	–	–	±2	LSB
		10-bit mode	ϕ_{AD} = 10 MHz, V_{ref} = V_{CC} = 3.3 V(3)	–	–	±5	LSB
		8-bit mode	ϕ_{AD} = 10 MHz, V_{ref} = V_{CC} = 3.3 V(3)	–	–	±2	LSB
R_{ladder}	Resistor ladder		V_{ref} = V_{CC}	10	–	40	kΩ
t_{conv}	Conversion time	10-bit mode	ϕ_{AD} = 10 MHz, V_{ref} = V_{CC} = 5.0 V	3.3	–	–	µs
		8-bit mode	ϕ_{AD} = 10 MHz, V_{ref} = V_{CC} = 5.0 V	2.8	–	–	µs
V_{ref}	Reference voltage			2.7	–	Vcc	V
V_{IA}	Analog input voltage(4)			0	–	AVcc	V
–	A/D operating clock frequency(2)	Without sample and hold		0.25	–	10	MHz
		With sample and hold		1	–	10	MHz

NOTES:
1. V_{CC} = AV_{CC} = 2.7 to 5.5 V at T_{opr} = -20 to 85 °C / -40 to 85 °C, unless otherwise specified.
2. If f1 exceeds 10 MHz, divide f1 and ensure the A/D operating clock frequency (ϕ_{AD}) is 10 MHz or below.
3. If AVcc is less than 4.2 V, divide f1 and ensure the A/D operating clock frequency (ϕ_{AD}) is f1/2 or below.
4. When the analog input voltage is over the reference voltage, the A/D conversion result will be 3FFh in 10-bit mode and FFh in 8-bit mode.

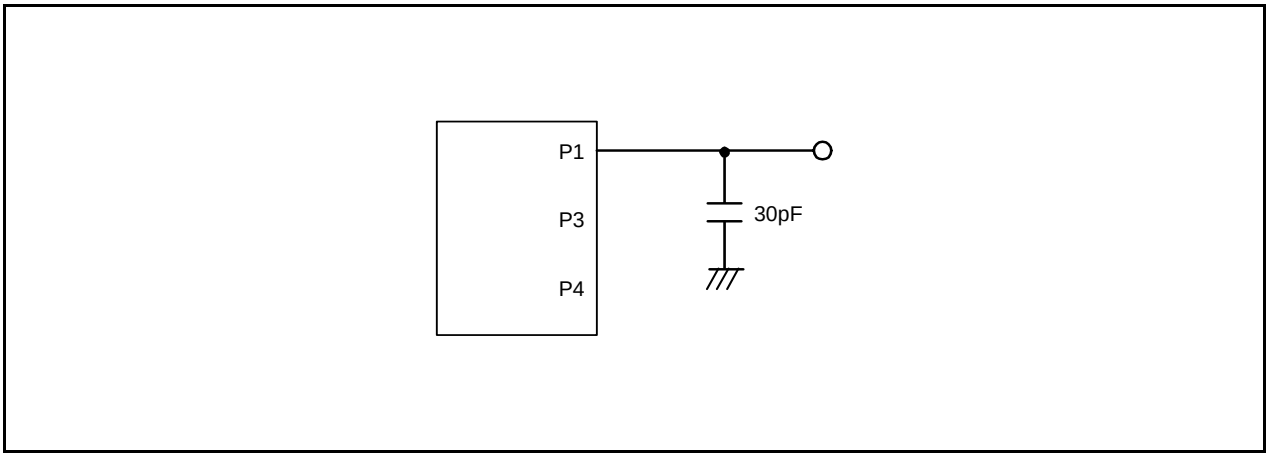

Figure 5.1 Port P1, P3, and P4 Measurement Circuit

Table 5.4 Flash Memory (Program ROM) Electrical Characteristics

Symbol	Parameter	Conditions	Standard			Unit
			Min.	Typ.	Max.	
–	Program/erase endurance(2)	R8C/1A Group	100(3)	–	–	times
		R8C/1B Group	1,000(3)	–	–	times
–	Byte program time		–	50	400	µs
–	Block erase time		–	0.4	9	s
$t_{d(SR-SUS)}$	Time delay from suspend request until suspend		–	–	97+CPU clock × 6 cycles	µs
–	Interval from erase start/restart until following suspend request		650	–	–	µs
–	Interval from program start/restart until following suspend request		0	–	–	ns
–	Time from suspend until program/erase restart		–	–	3+CPU clock × 4 cycles	µs
–	Program, erase voltage		2.7	–	5.5	V
–	Read voltage		2.7	–	5.5	V
–	Program, erase temperature		0	–	60	°C
–	Data hold time(8)	Ambient temperature = 55 °C	20	–	–	year

NOTES:
1. V_{CC} = 2.7 to 5.5 V at T_{opr} = 0 to 60 °C, unless otherwise specified.
2. Definition of programming/erasure endurance
   The programming and erasure endurance is defined on a per-block basis.
   If the programming and erasure endurance is n (n = 100 or 10,000), each block can be erased n times. For example, if 1,024 1-byte writes are performed to block A, a 1 Kbyte block, and then the block is erased, the programming/erasure endurance still stands at one. However, the same address must not be programmed more than once per erase operation (overwriting prohibited).
3. Endurance to guarantee all electrical characteristics after program and erase. (1 to Min. value can be guaranteed).
4. If emergency processing is required, a suspend request can be generated independent of this characteristic. In that case the normal time delay to suspend can be applied to the request. However, we recommend that a suspend request with an interval of less than 650 µs is only used once because, if the suspend state continues, erasure cannot operate and the incidence of erasure error rises.
5. In a system that executes multiple programming operations, the actual erasure count can be reduced by writing to sequential addresses in turn so that as much of the block as possible is used up before performing an erase operation. For example, when programming groups of 16 bytes, the effective number of rewrites can be minimized by programming up to 128 groups before erasing them all in one operation. In addition, averaging the number of erase operations between block A and block B can further reduce the effective number of rewrites. It is also advisable to retain data on the erase count of each block and limit the number of erase operations to a certain number.
6. If an error occurs during block erase, attempt to execute the clear status register command, then execute the block erase command at least three times until the erase error does not occur.
7. Customers desiring programming/erasure failure rate information should contact their Renesas technical support representative.
8. The data hold time includes time that the power supply is off or the clock is not supplied.

Table 5.5 Flash Memory (Data flash Block A, Block B) Electrical Characteristics

Symbol	Parameter	Conditions	Standard			Unit
			Min.	Typ.	Max.	
–	Program/erase endurance(2)		10,000(3)	–	–	times
–	Byte program time (Program/erase endurance ≤ 1,000 times)		–	50	400	µs
–	Byte program time (Program/erase endurance > 1,000 times)		–	65	–	µs
–	Block erase time (Program/erase endurance ≤ 1,000 times)		–	0.2	9	s
–	Block erase time (Program/erase endurance > 1,000 times)		–	0.3	–	s
$t_{d(SR-SUS)}$	Time Delay from suspend request until suspend		–	–	97+CPU clock × 6 cycles	µs
–	Interval from erase start/restart until following suspend request		650	–	–	µs
–	Interval from program start/restart until following suspend request		0	–	–	ns
–	Time from suspend until program/erase restart		–	–	3+CPU clock × 4 cycles	µs
–	Program, erase voltage		2.7	–	5.5	V
–	Read voltage		2.7	–	5.5	V
–	Program, erase temperature		-20(8)	–	85	°C
–	Data hold time(9)	Ambient temperature = 55 °C	20	–	–	year

NOTES:
1. V_{CC} = 2.7 to 5.5 V at T_{opr} = –20 to 85 °C / –40 to 85 °C, unless otherwise specified.
2. Definition of programming/erasure endurance
   The programming and erasure endurance is defined on a per-block basis.
   If the programming and erasure endurance is n (n = 100 or 10,000), each block can be erased n times. For example, if 1,024 1-byte writes are performed to block A, a 1 Kbyte block, and then the block is erased, the programming/erasure endurance still stands at one. However, the same address must not be programmed more than once per erase operation (overwriting prohibited).
3. Endurance to guarantee all electrical characteristics after program and erase. (1 to Min. value can be guaranteed).
4. If emergency processing is required, a suspend request can be generated independent of this characteristic. In that case the normal time delay to suspend can be applied to the request. However, we recommend that a suspend request with an interval of less than 650 µs is only used once because, if the suspend state continues, erasure cannot operate and the incidence of erasure error rises.
5. In a system that executes multiple programming operations, the actual erasure count can be reduced by writing to sequential addresses in turn so that as much of the block as possible is used up before performing an erase operation. For example, when programming groups of 16 bytes, the effective number of rewrites can be minimized by programming up to 128 groups before erasing them all in one operation. It is also advisable to retain data on the erase count of each block and limit the number of erase operations to a certain number.
6. If an error occurs during block erase, attempt to execute the clear status register command, then execute the block erase command at least three times until the erase error does not occur.
7. Customers desiring programming/erasure failure rate information should contact their Renesas technical support representative.
8. -40 °C for D version.
9. The data hold time includes time that the power supply is off or the clock is not supplied.

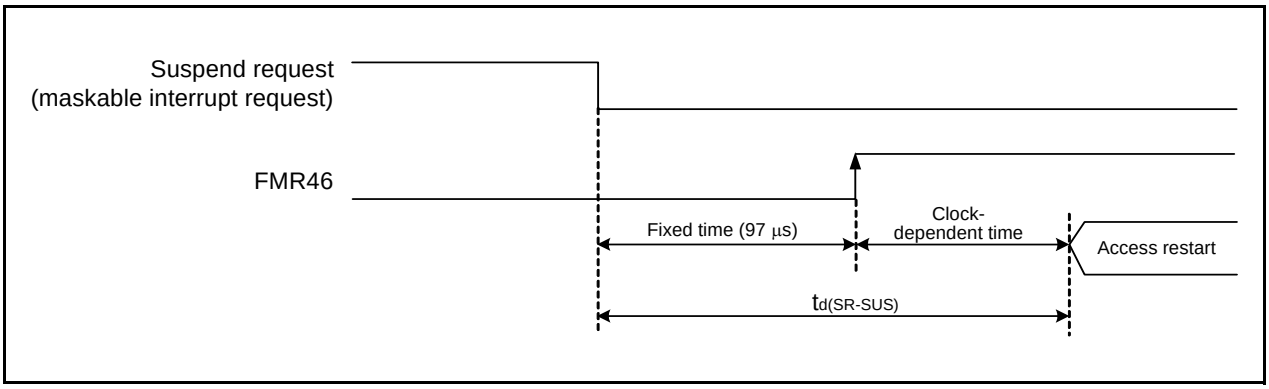

Figure 5.2 Transition Time to Suspend

Table 5.6 Voltage Detection 1 Circuit Electrical Characteristics

Symbol	Parameter	Condition	Standard			Unit
			Min.	Typ.	Max.	
V_{det1}	Voltage detection level(3)		2.70	2.85	3.00	V
–	Voltage detection circuit self power consumption	VCA26 = 1, V_{CC} = 5.0 V	–	600	–	nA
$t_{d(E-A)}$	Waiting time until voltage detection circuit operation starts(2)		–	–	100	µs
Vccmin	MCU operating voltage minimum value		2.7	–	–	V

NOTES:
1. The measurement condition is V_{CC} = 2.7 V to 5.5 V and T_{opr} = -40°C to 85 °C.
2. Necessary time until the voltage detection circuit operates when setting to 1 again after setting the VCA26 bit in the VCA2 register to 0.
3. Ensure that $V_{det2} > V_{det1}$.

Table 5.7 Voltage Detection 2 Circuit Electrical Characteristics

Symbol	Parameter	Condition	Standard			Unit
			Min.	Typ.	Max.	
V_{det2}	Voltage detection level(4)		3.00	3.30	3.60	V
–	Voltage monitor 2 interrupt request generation time(2)		–	40	–	µs
–	Voltage detection circuit self power consumption	VCA27 = 1, V_{CC} = 5.0 V	–	600	–	nA
$t_{d(E-A)}$	Waiting time until voltage detection circuit operation starts(3)		–	–	100	µs

NOTES:
1. The measurement condition is V_{CC} = 2.7 V to 5.5 V and T_{opr} = -40°C to 85 °C.
2. Time until the voltage monitor 2 interrupt request is generated after the voltage passes V_{det2}.
3. Necessary time until the voltage detection circuit operates when setting to 1 again after setting the VCA27 bit in the VCA2 register to 0.
4. Ensure that $V_{det2} > V_{det1}$.

Table 5.8 Reset Circuit Electrical Characteristics (When Using Voltage Monitor 1 Reset)

Symbol	Parameter	Condition	Standard			Unit
			Min.	Typ.	Max.	
V_{por2}	Power-on reset valid voltage	-20°C ≤ Topr ≤ 85°C	–	–	V_{det1}	V
$t_{w(Vpor2-Vdet1)}$	Supply voltage rising time when power-on reset is deasserted(1)	-20°C ≤ Topr ≤ 85°C, $t_{w(por2)}$ ≥ 0s(3)	–	–	100	ms

NOTES:
1. This condition is not applicable when using with Vcc ≥ 1.0 V.
2. When turning power on after the time to hold the external power below effective voltage (V_{por1}) exceeds10 s, refer to **Table 5.9 Reset Circuit Electrical Characteristics (When Not Using Voltage Monitor 1 Reset)**.
3. $t_{w(por2)}$ is the time to hold the external power below effective voltage (V_{por2}).

Table 5.9 Reset Circuit Electrical Characteristics (When Not Using Voltage Monitor 1 Reset)

Symbol	Parameter	Condition	Standard			Unit
			Min.	Typ.	Max.	
V_{por1}	Power-on reset valid voltage	-20°C ≤ Topr ≤ 85°C	–	–	0.1	V
$t_{w(Vpor1-Vdet1)}$	Supply voltage rising time when power-on reset is deasserted	0°C ≤ Topr ≤ 85°C, $t_{w(por1)}$ ≥ 10 s(2)	–	–	100	ms
$t_{w(Vpor1-Vdet1)}$	Supply voltage rising time when power-on reset is deasserted	-20°C ≤ Topr < 0°C, $t_{w(por1)}$ ≥ 30 s(2)	–	–	100	ms
$t_{w(Vpor1-Vdet1)}$	Supply voltage rising time when power-on reset is deasserted	-20°C ≤ Topr < 0°C, $t_{w(por1)}$ ≥ 10 s(2)	–	–	1	ms
$t_{w(Vpor1-Vdet1)}$	Supply voltage rising time when power-on reset is deasserted	0°C ≤ Topr ≤ 85°C, $t_{w(por1)}$ ≥ 1 s(2)	–	–	0.5	ms

NOTES:
1. When not using voltage monitor 1, use with Vcc≥ 2.7 V.
2. $t_{w(por1)}$ is the time to hold the external power below effective voltage (V_{por1}).

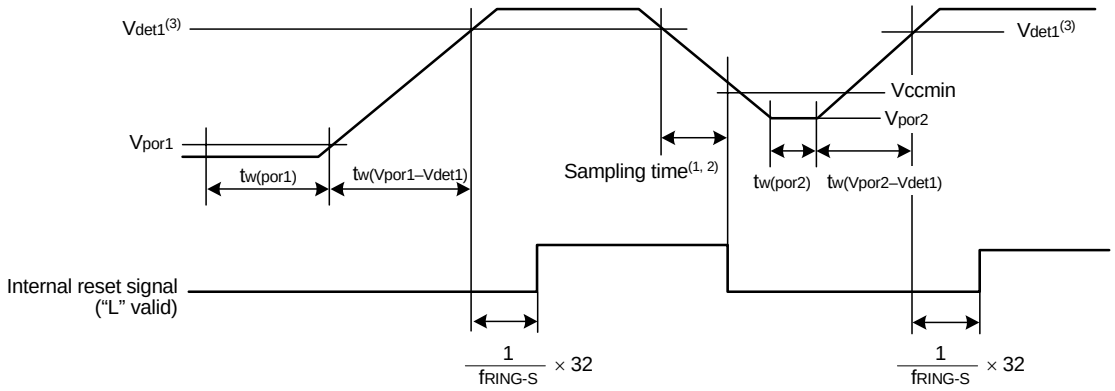

NOTES:
1. Hold the voltage inside the MCU operation voltage range (Vccmin or above) within the sampling time.
2. The sampling clock can be selected. Refer to **7. Voltage Detection Circuit** for details.
3. V_{det1} indicates the voltage detection level of the voltage detection 1 circuit. Refer to **7. Voltage Detection Circuit** for details.

Figure 5.3 Reset Circuit Electrical Characteristics

Table 5.10 High-Speed On-Chip Oscillator Circuit Electrical Characteristics

Symbol	Parameter	Condition	Standard			Unit
			Min.	Typ.	Max.	
–	High-speed on-chip oscillator frequency when the reset is deasserted	V_{CC} = 5.0 V, T_{opr} = 25 °C	–	8	–	MHz
–	High-speed on-chip oscillator frequency temperature • supply voltage dependence(2)	0 to +60 °C/5 V ± 5 %(3)	7.76	–	8.24	MHz
		-20 to +85 °C/2.7 to 5.5 V(3)	7.68	–	8.32	MHz
		-40 to +85 °C/2.7 to 5.5 V(3)	7.44	–	8.32	MHz

NOTES:
1. The measurement condition is V_{CC} = 5.0 V and T_{opr} = 25 °C.
2. Refer to **10.6.4 High-Speed On-Chip Oscillator Clock** for notes on high-speed on-chip oscillator clock.
3. The standard value shows when the HRA1 register is assumed as the value in shipping and the HRA2 register value is set to 00h.

Table 5.11 Power Supply Circuit Timing Characteristics

Symbol	Parameter	Condition	Standard			Unit
			Min.	Typ.	Max.	
$t_{d(P-R)}$	Time for internal power supply stabilization during power-on(2)		1	–	2000	µs
$t_{d(R-S)}$	STOP exit time(3)		–	–	150	µs

NOTES:
1. The measurement condition is V_{CC} = 2.7 to 5.5 V and T_{opr} = 25 °C.
2. Waiting time until the internal power supply generation circuit stabilizes during power-on.
3. Time until CPU clock supply starts after the interrupt is acknowledged to exit stop mode.

Table 5.12 Timing Requirements of Clock Synchronous Serial I/O with Chip Select(1)

Symbol	Parameter		Conditions	Standard			Unit
				Min.	Typ.	Max.	
t_{SUCYC}	SSCK clock cycle time			4	–	–	t_{CYC}(2)
t_{HI}	SSCK clock “H” width			0.4	–	0.6	t_{SUCYC}
t_{LO}	SSCK clock “L” width			0.4	–	0.6	t_{SUCYC}
t_{RISE}	SSCK clock rising time	Master		–	–	1	t_{CYC}(2)
		Slave		–	–	1	µs
t_{FALL}	SSCK clock falling time	Master		–	–	1	t_{CYC}(2)
		Slave		–	–	1	µs
t_{SU}	SSO, SSI data input setup time			100	–	–	ns
t_{H}	SSO, SSI data input hold time			1	–	–	t_{CYC}(2)
t_{LEAD}	$\overline{SCS}$ setup time	Slave		1t_{CYC}+50	–	–	ns
t_{LAG}	$\overline{SCS}$ hold time	Slave		1t_{CYC}+50	–	–	ns
t_{OD}	SSO, SSI data output delay time			–	–	1	t_{CYC}(2)
t_{SA}	SSI slave access time			–	–	1.5t_{CYC}+100	ns
t_{OR}	SSI slave out open time			–	–	1.5t_{CYC}+100	ns

NOTES:
1. V_{CC} = 2.7 to 5.5V, V_{SS} = 0V at Ta = -20 to 85 °C / -40 to 85 °C, unless otherwise specified.
2. 1t_{CYC} = 1/f1(s)

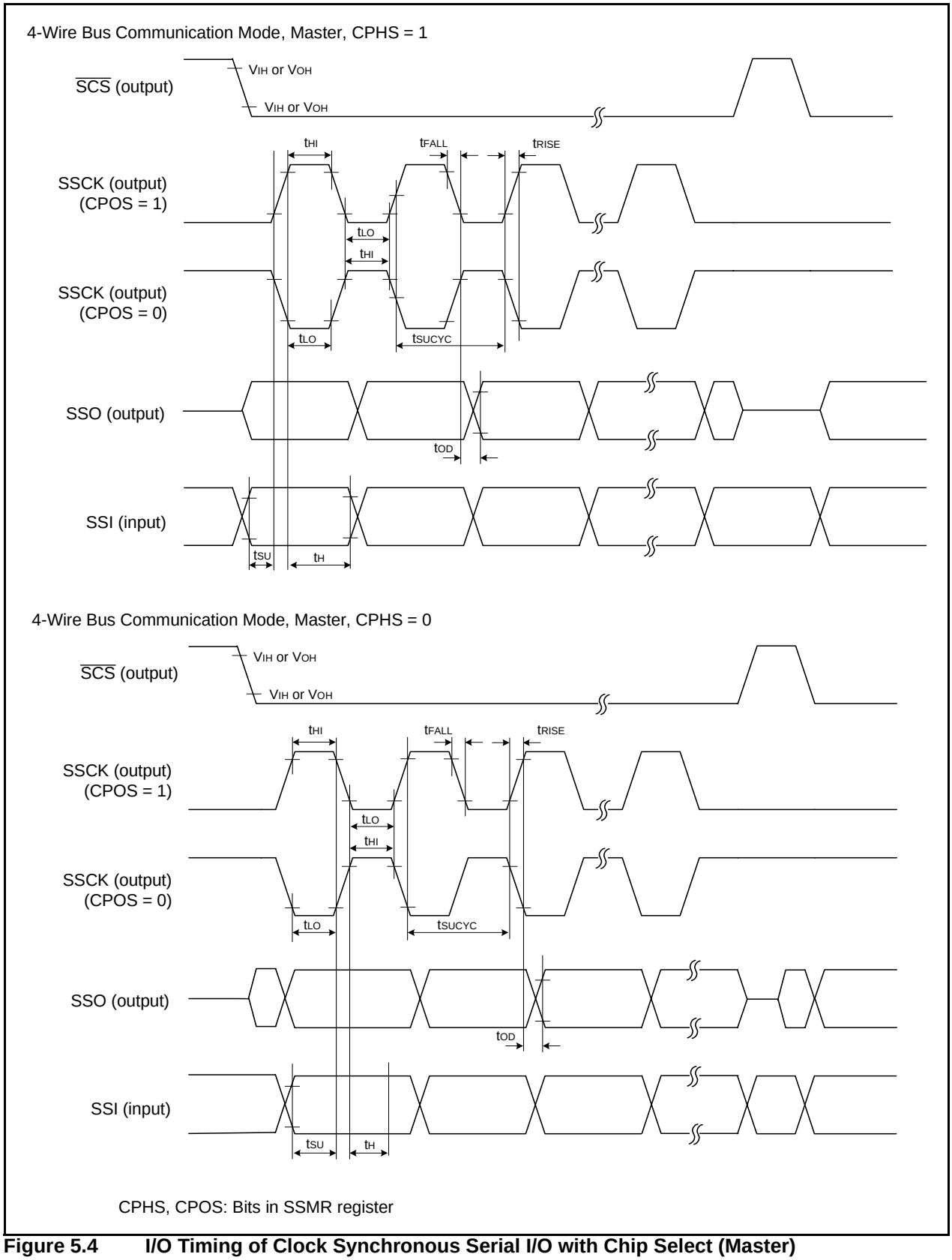

Figure 5.4 I/O Timing of Clock Synchronous Serial I/O with Chip Select (Master)

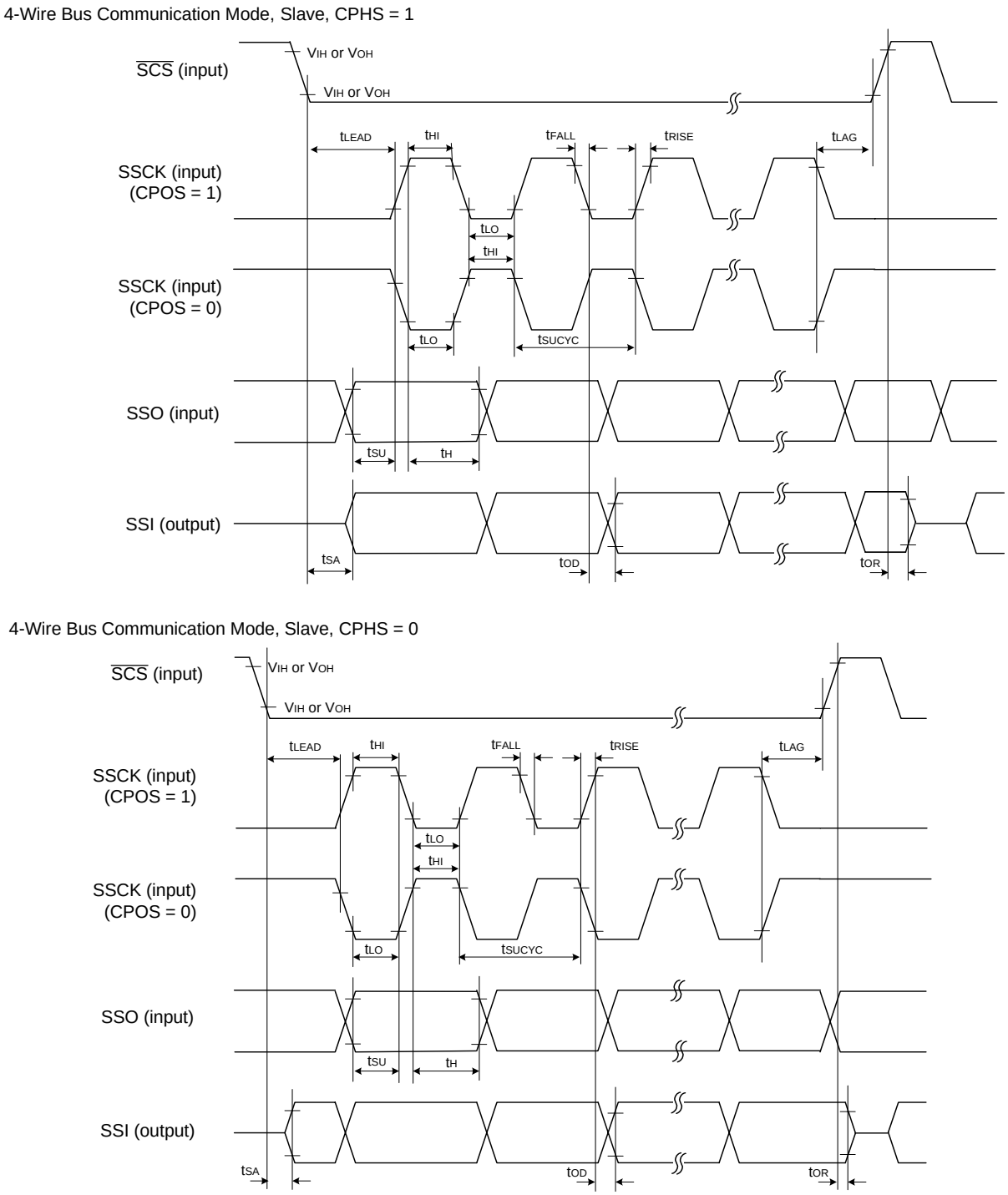

Figure 5.5 I/O Timing of Clock Synchronous Serial I/O with Chip Select (Slave)

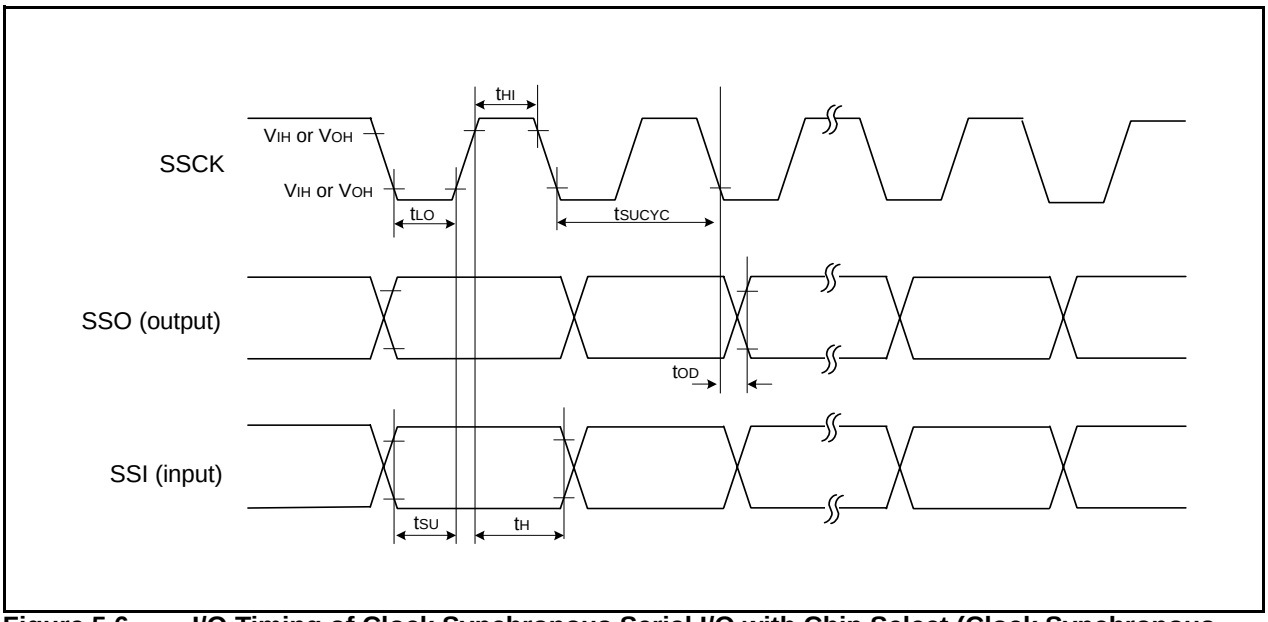

Figure 5.6 I/O Timing of Clock Synchronous Serial I/O with Chip Select (Clock Synchronous Communication Mode)

Table 5.13 Timing Requirements of I²C bus Interface (1)

Symbol	Parameter	Condition	Standard			Unit
			Min.	Typ.	Max.	
t_{SCL}	SCL input cycle time		$12t_{CYC}+600^{(2)}$	–	–	ns
t_{SCLH}	SCL input “H” width		$3t_{CYC}+300^{(2)}$	–	–	ns
t_{SCLL}	SCL input “L” width		$5t_{CYC}+300^{(2)}$	–	–	ns
t_{sf}	SCL, SDA input fall time		–	–	300	ns
t_{SP}	SCL, SDA input spike pulse rejection time		–	–	$1t_{CYC}^{(2)}$	ns
t_{BUF}	SDA input bus-free time		$5t_{CYC}^{(2)}$	–	–	ns
t_{STAH}	Start condition input hold time		$3t_{CYC}^{(2)}$	–	–	ns
t_{STAS}	Retransmit start condition input setup time		$3t_{CYC}^{(2)}$	–	–	ns
t_{STOS}	Stop condition input setup time		$3t_{CYC}^{(2)}$	–	–	ns
t_{SDAS}	Data input setup time		$1t_{CYC}+20^{(2)}$	–	–	ns
t_{SDAH}	Data input hold time		0	–	–	ns

NOTES:
1. V_{CC} = 2.7 to 5.5 V, V_{SS} = 0 V and Ta = -20 to 85 °C / -40 to 85 °C, unless otherwise specified.
2. $1t_{CYC}$ = 1/f1(s)

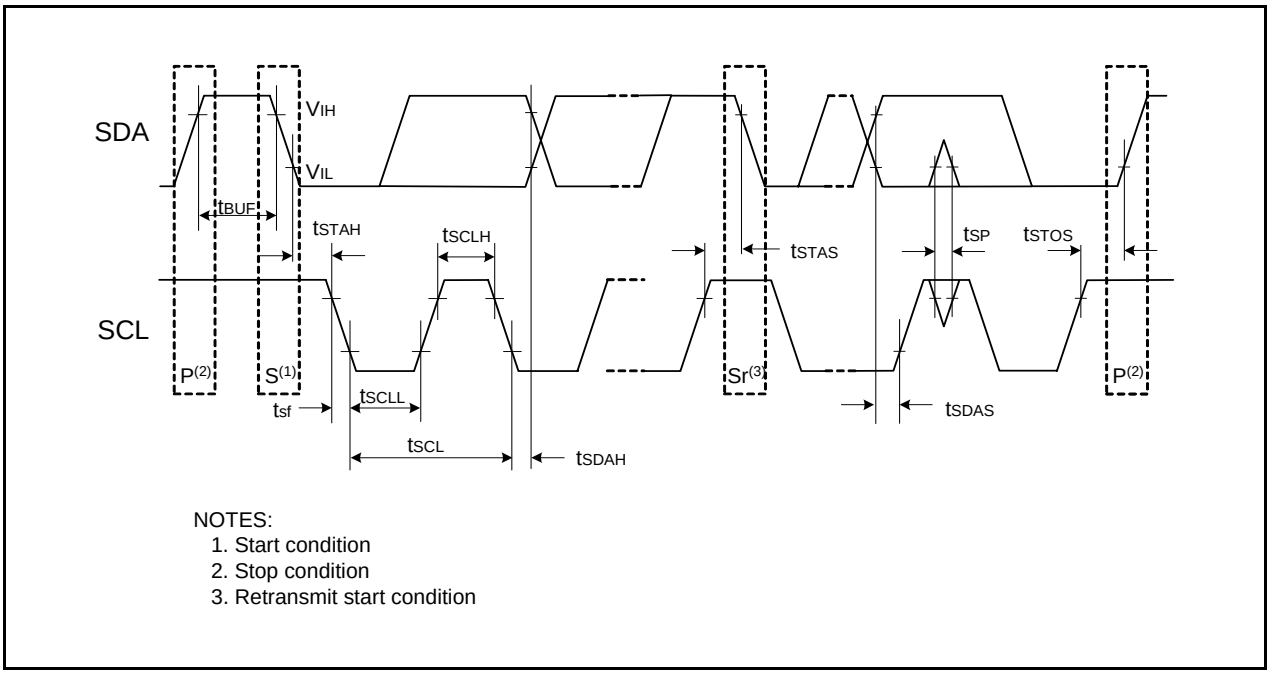

NOTES:
1. Start condition
2. Stop condition
3. Retransmit start condition

Figure 5.7 I/O Timing of I²C bus Interface

Table 5.14 Electrical Characteristics (1) [V_{CC} = 5 V]

Symbol	Parameter		Condition		Standard			Unit
					Min.	Typ.	Max.	
V_{OH}	Output “H” voltage	Except X_{OUT}	I_{OH} = -5 mA		V_{CC} – 2.0	–	V_{CC}	V
			I_{OH} = -200 µA		V_{CC} – 0.3	–	V_{CC}	V
		X_{OUT}	Drive capacity HIGH	I_{OH} = -1 mA	V_{CC} – 2.0	–	V_{CC}	V
			Drive capacity LOW	I_{OH} = -500 µA	V_{CC} – 2.0	–	V_{CC}	V
V_{OL}	Output “L” voltage	Except P1_0 to P1_3, X_{OUT}	I_{OL} = 5 mA		–	–	2.0	V
			I_{OL} = 200 µA		–	–	0.45	V
		P1_0 to P1_3	Drive capacity HIGH	I_{OL} = 15 mA	–	–	2.0	V
			Drive capacity LOW	I_{OL} = 5 mA	–	–	2.0	V
			Drive capacity LOW	I_{OL} = 200 µA	–	–	0.45	V
		X_{OUT}	Drive capacity HIGH	I_{OL} = 1 mA	–	–	2.0	V
			Drive capacity LOW	I_{OL} = 500 µA	–	–	2.0	V
V_{T+}-V_{T-}	Hysteresis	$\overline{INT0}$, $\overline{INT1}$, $\overline{INT3}$, $\overline{KI0}$, $\overline{KI1}$, $\overline{KI2}$, $\overline{KI3}$, CNTR0, CNTR1, TCIN, RXD0			0.2	–	1.0	V
		$\overline{RESET}$			0.2	–	2.2	V
I_{IH}	Input “H” current		VI = 5 V		–	–	5.0	µA
I_{IL}	Input “L” current		VI = 0 V		–	–	-5.0	µA
R_{PULLUP}	Pull-up resistance		VI = 0 V		30	50	167	kΩ
R_{fXIN}	Feedback resistance	XIN			–	1.0	–	MΩ
f_{RING-S}	Low-speed on-chip oscillator frequency				40	125	250	kHz
V_{RAM}	RAM hold voltage		During stop mode		2.0	–	–	V

NOTE:
1. V_{CC} = 4.2 to 5.5 V at T_{opr} = -20 to 85 °C / -40 to 85 °C, f(XIN) = 20 MHz, unless otherwise specified.

Table 5.15 Electrical Characteristics (2) [Vcc = 5 V] (Topr = -40 to 85 °C, unless otherwise specified.)

Symbol	Parameter	Condition		Standard			Unit
				Min.	Typ.	Max.	
I_{CC}	Power supply current (V_{CC} = 3.3 to 5.5 V) Single-chip mode, output pins are open, other pins are V_{SS}, A/D converter is stopped	High-speed mode	XIN = 20 MHz (square wave) High-speed on-chip oscillator off Low-speed on-chip oscillator on = 125 kHz No division	–	9	15	mA
			XIN = 16 MHz (square wave) High-speed on-chip oscillator off Low-speed on-chip oscillator on = 125 kHz No division	–	8	14	mA
			XIN = 10 MHz (square wave) High-speed on-chip oscillator off Low-speed on-chip oscillator on = 125 kHz No division	–	5	–	mA
		Medium-speed mode	XIN = 20 MHz (square wave) High-speed on-chip oscillator off Low-speed on-chip oscillator on = 125 kHz Divide-by-8	–	4	–	mA
			XIN = 16 MHz (square wave) High-speed on-chip oscillator off Low-speed on-chip oscillator on = 125 kHz Divide-by-8	–	3	–	mA
			XIN = 10 MHz (square wave) High-speed on-chip oscillator off Low-speed on-chip oscillator on = 125 kHz Divide-by-8	–	2	–	mA
		High-speed on-chip oscillator mode	Main clock off High-speed on-chip oscillator on = 8 MHz Low-speed on-chip oscillator on = 125 kHz No division	–	4	8	mA
			Main clock off High-speed on-chip oscillator on = 8 MHz Low-speed on-chip oscillator on = 125 kHz Divide-by-8	–	1.5	–	mA
		Low-speed on-chip oscillator mode	Main clock off High-speed on-chip oscillator off Low-speed on-chip oscillator on = 125 kHz Divide-by-8 FMR47 = 1	–	110	300	µA
		Wait mode	Main clock off High-speed on-chip oscillator off Low-speed on-chip oscillator on = 125 kHz While a WAIT instruction is executed Peripheral clock operation VCA27 = VCA26 = 0	–	40	80	µA
		Wait mode	Main clock off High-speed on-chip oscillator off Low-speed on-chip oscillator on = 125 kHz While a WAIT instruction is executed Peripheral clock off VCA27 = VCA26 = 0	–	38	76	µA
		Stop mode	Main clock off, Topr = 25 °C High-speed on-chip oscillator off Low-speed on-chip oscillator off CM10 = 1 Peripheral clock off VCA27 = VCA26 = 0	–	0.8	3.0	µA

Timing Requirements
(Unless otherwise specified: Vcc = 5 V, Vss = 0 V at Ta = 25 °C) [Vcc = 5 V]

Table 5.16 XIN Input

Symbol	Parameter	Standard		Unit
		Min.	Max.	
$t_{c(XIN)}$	XIN input cycle time	50	–	ns
$t_{WH(XIN)}$	XIN input “H” width	25	–	ns
$t_{WL(XIN)}$	XIN input “L” width	25	–	ns

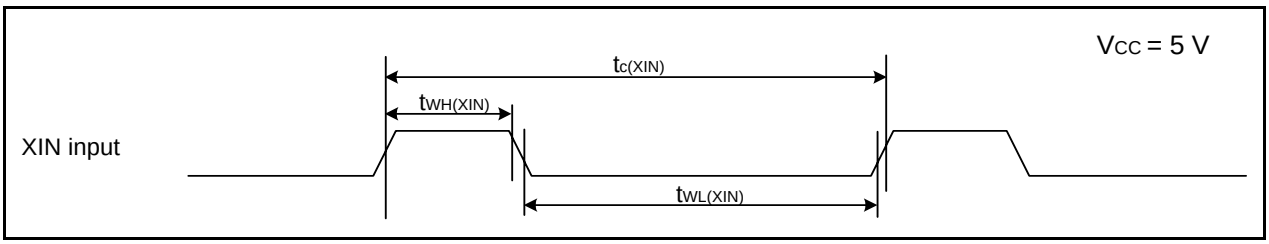

Figure 5.8 XIN Input Timing Diagram when Vcc = 5 V

Table 5.17 CNTR0 Input, CNTR1 Input, $\overline{\text{INT1}}$ Input

Symbol	Parameter	Standard		Unit
		Min.	Max.	
$t_{c(CNTR0)}$	CNTR0 input cycle time	100	–	ns
$t_{WH(CNTR0)}$	CNTR0 input “H” width	40	–	ns
$t_{WL(CNTR0)}$	CNTR0 input “L” width	40	–	ns

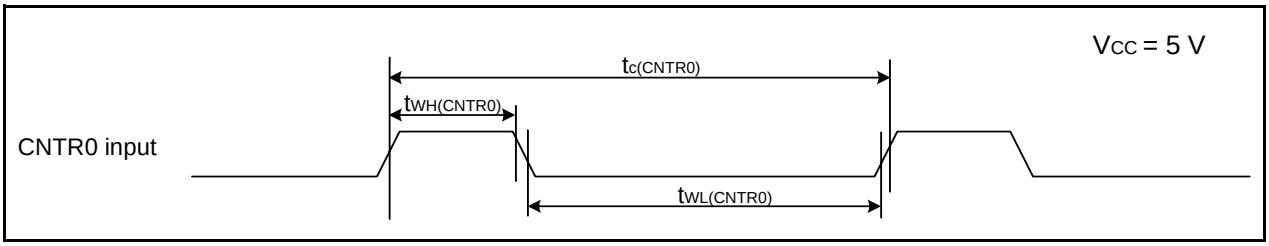

Figure 5.9 CNTR0 Input, CNTR1 Input, $\overline{\text{INT1}}$ Input Timing Diagram when Vcc = 5 V

Table 5.18 TCIN Input, $\overline{\text{INT3}}$ Input

Symbol	Parameter	Standard		Unit
		Min.	Max.	
$t_{c(TCIN)}$	TCIN input cycle time	400(1)	–	ns
$t_{WH(TCIN)}$	TCIN input “H” width	200(2)	–	ns
$t_{WL(TCIN)}$	TCIN input “L” width	200(2)	–	ns

NOTES:
1. When using timer C input capture mode, adjust the cycle time to (1/timer C count source frequency x 3) or above.
2. When using timer C input capture mode, adjust the pulse width to (1/timer C count source frequency x 1.5) or above.

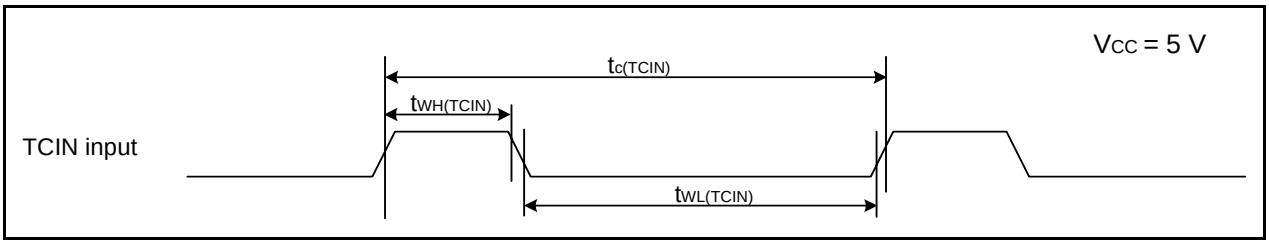

Figure 5.10 TCIN Input, $\overline{\text{INT3}}$ Input Timing Diagram when Vcc = 5 V

Table 5.19 Serial Interface

Symbol	Parameter	Standard		Unit
		Min.	Max.	
$t_{c(CK)}$	CLKi input cycle time	200	–	ns
$t_{W(CKH)}$	CLKi input “H” width	100	–	ns
$t_{W(CKL)}$	CLKi input “L” width	100	–	ns
$t_{d(C-Q)}$	TXDi output delay time	–	50	ns
$t_{h(C-Q)}$	TXDi hold time	0	–	ns
$t_{su(D-C)}$	RXDi input setup time	50	–	ns
$t_{h(C-D)}$	RXDi input hold time	90	–	ns

i = 0 or 1

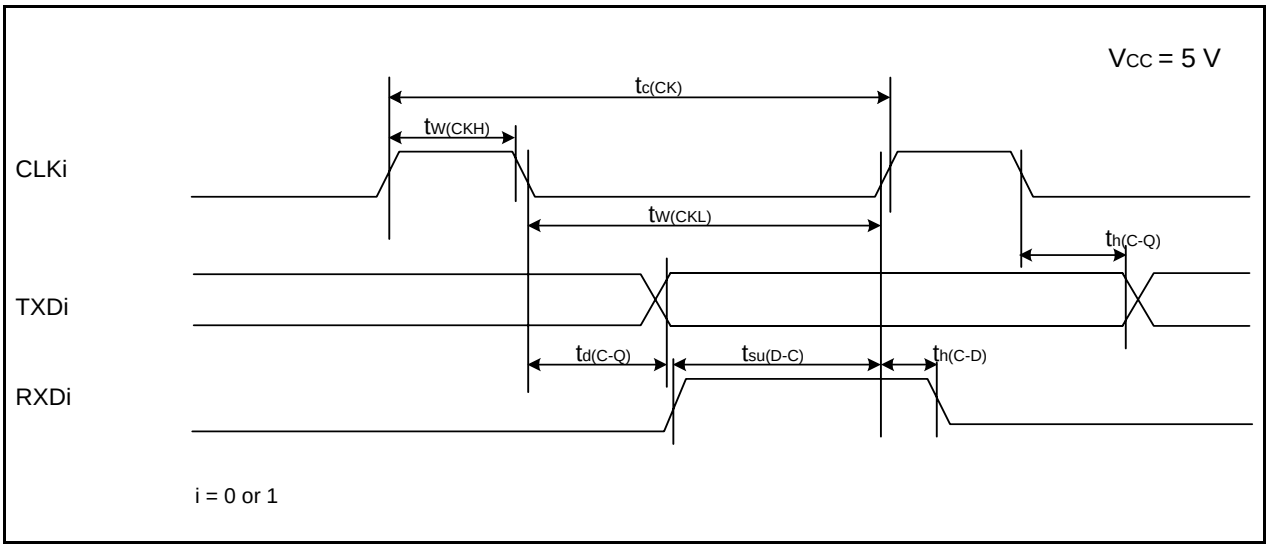

Figure 5.11 Serial Interface Timing Diagram when Vcc = 5 V

Table 5.20 External Interrupt $\overline{INT0}$ Input

Symbol	Parameter	Standard		Unit
		Min.	Max.	
$t_{W(INH)}$	$\overline{INT0}$ input “H” width	250(1)	–	ns
$t_{W(INL)}$	$\overline{INT0}$ input “L” width	250(2)	–	ns

NOTES:
1. When selecting the digital filter by the $\overline{INT0}$ input filter select bit, use an $\overline{INT0}$ input HIGH width of either (1/digital filter clock frequency x 3) or the minimum value of standard, whichever is greater.
2. When selecting the digital filter by the $\overline{INT0}$ input filter select bit, use an $\overline{INT0}$ input LOW width of either (1/digital filter clock frequency x 3) or the minimum value of standard, whichever is greater.

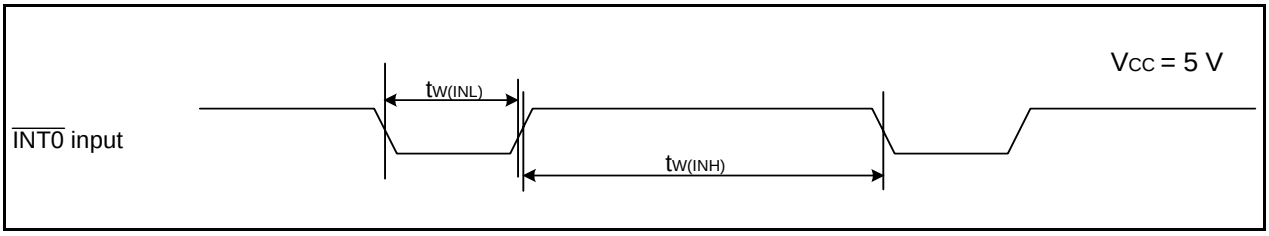

Figure 5.12 External Interrupt $\overline{INT0}$ Input Timing Diagram when Vcc = 5 V

Table 5.21 Electrical Characteristics (3) [Vcc = 3V]

Symbol	Parameter		Condition		Standard			Unit
					Min.	Typ.	Max.	
V_{OH}	Output “H” voltage	Except X_{OUT}	I_{OH} = -1 mA		V_{CC} – 0.5	–	V_{CC}	V
		X_{OUT}	Drive capacity HIGH	I_{OH} = -0.1 mA	V_{CC} – 0.5	–	V_{CC}	V
			Drive capacity LOW	I_{OH} = -50 µA	V_{CC} – 0.5	–	V_{CC}	V
V_{OL}	Output “L” voltage	Except P1_0 to P1_3, X_{OUT}	I_{OL} = 1 mA		–	–	0.5	V
		P1_0 to P1_3	Drive capacity HIGH	I_{OL} = 2 mA	–	–	0.5	V
			Drive capacity LOW	I_{OL} = 1 mA	–	–	0.5	V
		X_{OUT}	Drive capacity HIGH	I_{OL} = 0.1 mA	–	–	0.5	V
			Drive capacity LOW	I_{OL} = 50 µA	–	–	0.5	V
V_{T+}-V_{T-}	Hysteresis	$\overline{INT0}$, $\overline{INT1}$, $\overline{INT3}$, $\overline{KI0}$, $\overline{KI1}$, $\overline{KI2}$, $\overline{KI3}$, CNTR0, CNTR1, TCIN, RXD0			0.2	–	0.8	V
		$\overline{RESET}$			0.2	–	1.8	V
I_{IH}	Input “H” current		VI = 3 V		–	–	4.0	µA
I_{IL}	Input “L” current		VI = 0 V		–	–	-4.0	µA
R_{PULLUP}	Pull-up resistance		VI = 0 V		66	160	500	kΩ
R_{fXIN}	Feedback resistance	XIN			–	3.0	–	MΩ
f_{RING-S}	Low-speed on-chip oscillator frequency				40	125	250	kHz
V_{RAM}	RAM hold voltage		During stop mode		2.0	–	–	V

NOTE:
1. V_{CC} = 2.7 to 3.3 V at T_{opr} = -20 to 85 °C / -40 to 85 °C, f(XIN) = 10 MHz, unless otherwise specified.

Table 5.22 Electrical Characteristics (4) [Vcc = 3 V] (Topr = -40 to 85 °C, unless otherwise specified.)

Symbol	Parameter	Condition		Standard			Unit
				Min.	Typ.	Max.	
I_{CC}	Power supply current (V_{CC} = 2.7 to 3.3 V) Single-chip mode, output pins are open, other pins are V_{SS}, A/D converter is stopped	High-speed mode	XIN = 20 MHz (square wave) High-speed on-chip oscillator off Low-speed on-chip oscillator on = 125 kHz No division	–	8	13	mA
			XIN = 16 MHz (square wave) High-speed on-chip oscillator off Low-speed on-chip oscillator on = 125 kHz No division	–	7	12	mA
			XIN = 10 MHz (square wave) High-speed on-chip oscillator off Low-speed on-chip oscillator on = 125 kHz No division	–	5	–	mA
		Medium-speed mode	XIN = 20 MHz (square wave) High-speed on-chip oscillator off Low-speed on-chip oscillator on = 125 kHz Divide-by-8	–	3	–	mA
			XIN = 16 MHz (square wave) High-speed on-chip oscillator off Low-speed on-chip oscillator on = 125 kHz Divide-by-8	–	2.5	–	mA
			XIN = 10 MHz (square wave) High-speed on-chip oscillator off Low-speed on-chip oscillator on = 125 kHz Divide-by-8	–	1.6	–	mA
		High-speed on-chip oscillator mode	Main clock off High-speed on-chip oscillator on = 8 MHz Low-speed on-chip oscillator on = 125 kHz No division	–	3.5	7.5	mA
			Main clock off High-speed on-chip oscillator on = 8 MHz Low-speed on-chip oscillator on = 125 kHz Divide-by-8	–	1.5	–	mA
		Low-speed on-chip oscillator mode	Main clock off High-speed on-chip oscillator off Low-speed on-chip oscillator on = 125 kHz Divide-by-8 FMR47 = 1	–	100	280	µA
		Wait mode	Main clock off High-speed on-chip oscillator off Low-speed on-chip oscillator on = 125 kHz While a WAIT instruction is executed Peripheral clock operation VCA27 = VCA26 = 0	–	37	74	µA
		Wait mode	Main clock off High-speed on-chip oscillator off Low-speed on-chip oscillator on = 125 kHz While a WAIT instruction is executed Peripheral clock off VCA27 = VCA26 = 0	–	35	70	µA
		Stop mode	Main clock off, Topr = 25 °C High-speed on-chip oscillator off Low-speed on-chip oscillator off CM10 = 1 Peripheral clock off VCA27 = VCA26 = 0	–	0.7	3.0	µA

Timing requirements (Unless Otherwise Specified: Vcc = 3 V, Vss = 0 V at Ta = 25 °C) [Vcc = 3 V]

Table 5.23 XIN Input

Symbol	Parameter	Standard		Unit
		Min.	Max.	
$t_{c(XIN)}$	XIN input cycle time	100	–	ns
$t_{WH(XIN)}$	XIN input “H” width	40	–	ns
$t_{WL(XIN)}$	XIN input “L” width	40	–	ns

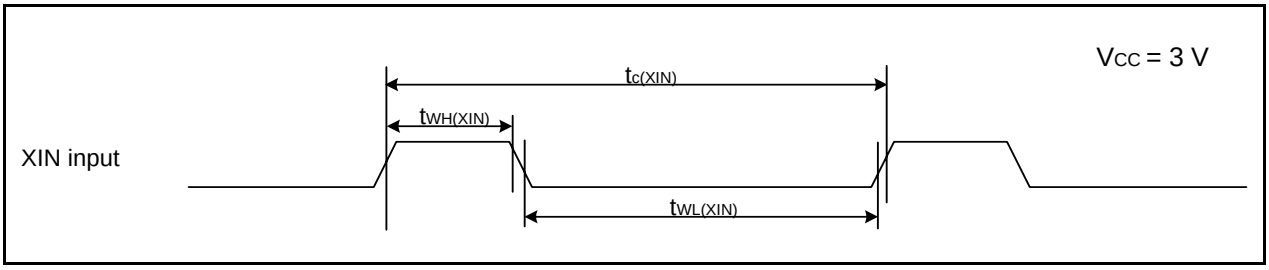

Figure 5.13 XIN Input Timing Diagram when Vcc = 3 V

Table 5.24 CNTR0 Input, CNTR1 Input, $\overline{\text{INT1}}$ Input

Symbol	Parameter	Standard		Unit
		Min.	Max.	
$t_{c(CNTR0)}$	CNTR0 input cycle time	300	–	ns
$t_{WH(CNTR0)}$	CNTR0 input “H” width	120	–	ns
$t_{WL(CNTR0)}$	CNTR0 input “L” width	120	–	ns

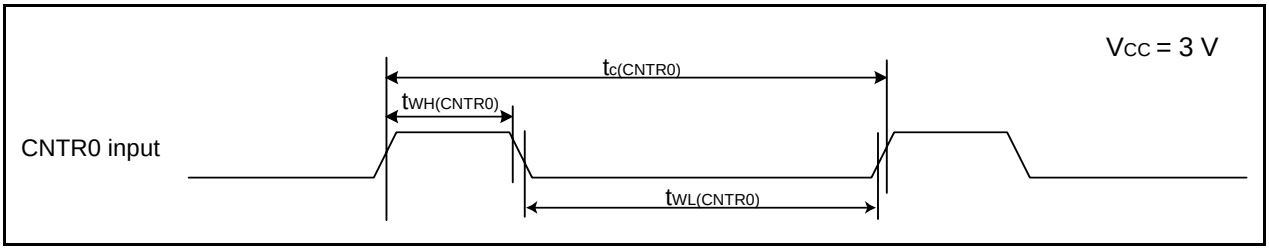

Figure 5.14 CNTR0 Input, CNTR1 Input, $\overline{\text{INT1}}$ Input Timing Diagram when Vcc = 3 V

Table 5.25 TCIN Input, $\overline{\text{INT3}}$ Input

Symbol	Parameter	Standard		Unit
		Min.	Max.	
$t_{c(TCIN)}$	TCIN input cycle time	1,200(1)	–	ns
$t_{WH(TCIN)}$	TCIN input “H” width	600(2)	–	ns
$t_{WL(TCIN)}$	TCIN input “L” width	600(2)	–	ns

NOTES:
1. When using the timer C input capture mode, adjust the cycle time to (1/timer C count source frequency x 3) or above.
2. When using the timer C input capture mode, adjust the width to (1/timer C count source frequency x 1.5) or above.

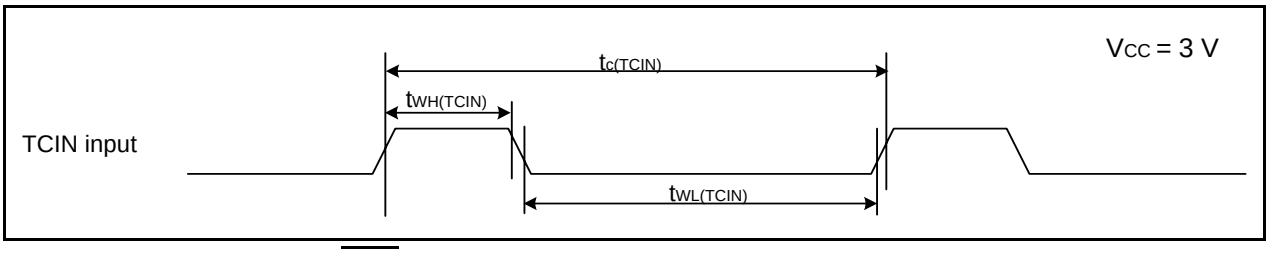

Figure 5.15 TCIN Input, $\overline{\text{INT3}}$ Input Timing Diagram when Vcc = 3 V

Table 5.26 Serial Interface

Symbol	Parameter	Standard		Unit
		Min.	Max.	
$t_{c(CK)}$	CLKi input cycle time	300	–	ns
$t_{W(CKH)}$	CLKi input “H” width	150	–	ns
$t_{W(CKL)}$	CLKi input “L” width	150	–	ns
$t_{d(C-Q)}$	TXDi output delay time	–	80	ns
$t_{h(C-Q)}$	TXDi hold time	0	–	ns
$t_{su(D-C)}$	RXDi input setup time	70	–	ns
$t_{h(C-D)}$	RXDi input hold time	90	–	ns

i = 0 or 1

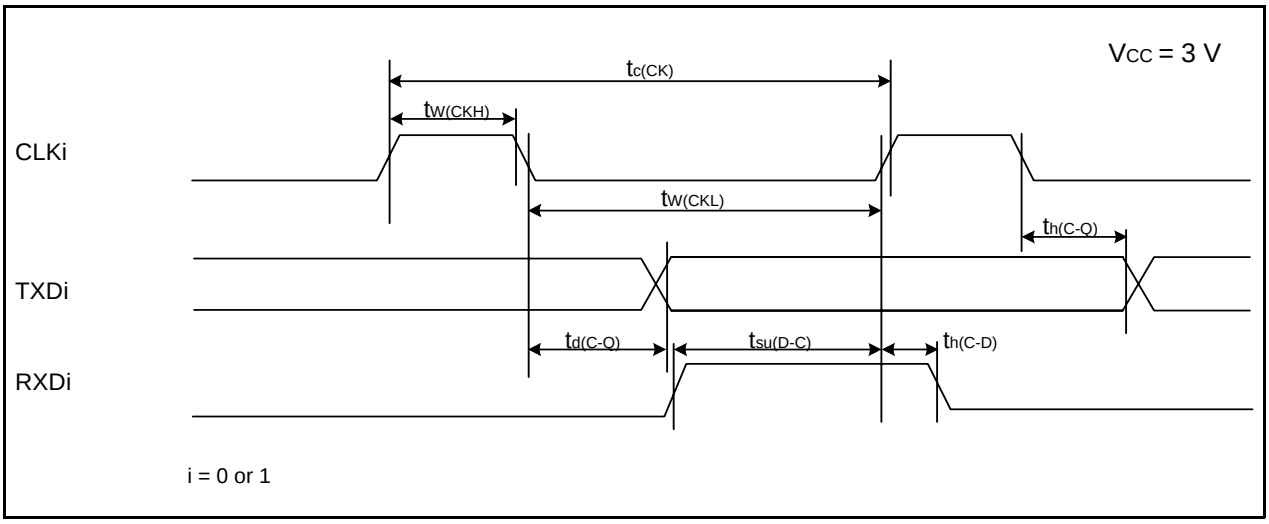

Figure 5.16 Serial Interface Timing Diagram when VCC = 3 V

Table 5.27 External Interrupt $\overline{INT0}$ Input

Symbol	Parameter	Standard		Unit
		Min.	Max.	
$t_{W(INH)}$	$\overline{INT0}$ input “H” width	380(1)	–	ns
$t_{W(INL)}$	$\overline{INT0}$ input “L” width	380(2)	–	ns

NOTES:
1. When selecting the digital filter by the $\overline{INT0}$ input filter select bit, use an $\overline{INT0}$ input HIGH width of either (1/digital filter clock frequency x 3) or the minimum value of standard, whichever is greater
2. When selecting the digital filter by the $\overline{INT0}$ input filter select bit, use an $\overline{INT0}$ input LOW width of either (1/digital filter clock frequency x 3) or the minimum value of standard, whichever is greater

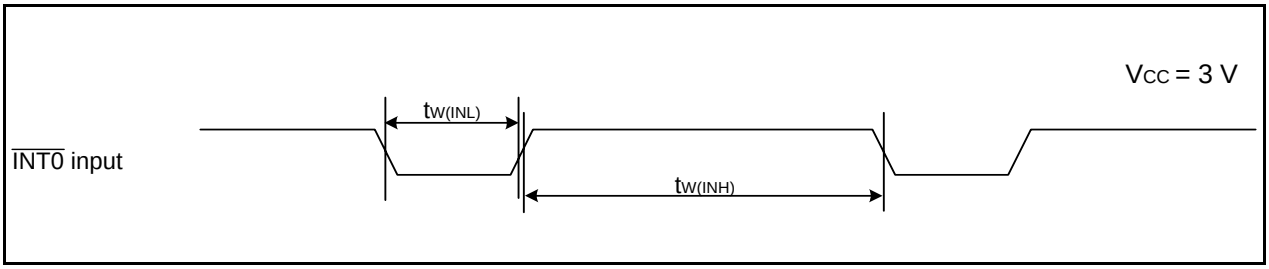

Figure 5.17 External Interrupt $\overline{INT0}$ Input Timing Diagram when VCC = 3 V

Package Dimensions

Diagrams showing the latest package dimensions and mounting information are available in the “Packages” section of the Renesas Technology website.

JEITA Package Code	RENESAS Code	Previous Code	MASS[Typ.]
P-LSSOP20-4.4x6.5-0.65	PLSP0020JB-A	20P2F-A	0.1g

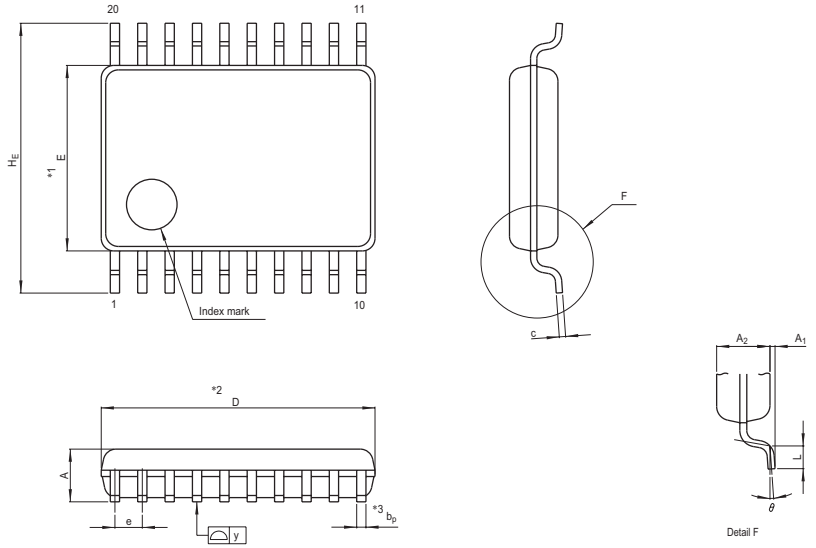

NOTE)
1. DIMENSIONS "*1" AND "*2" DO NOT INCLUDE MOLD FLASH.
2. DIMENSION "*3" DOES NOT INCLUDE TRIM OFFSET.

Reference Symbol	Dimension in Millimeters		
	Min	Nom	Max
D	6.4	6.5	6.6
E	4.3	4.4	4.5
A_2	—	1.15	—
A	—	—	1.45
A_1	0	0.1	0.2
b_p	0.17	0.22	0.32
c	0.13	0.15	0.2
θ	0°	—	10°
H_E	6.2	6.4	6.6
e	0.53	0.65	0.77
y	—	—	0.10
L	0.3	0.5	0.7

JEITA Package Code	RENESAS Code	Previous Code	MASS[Typ.]
P-SDIP20-6.3x19-1.78	PRDP0020BA-A	20P4B	1.0g

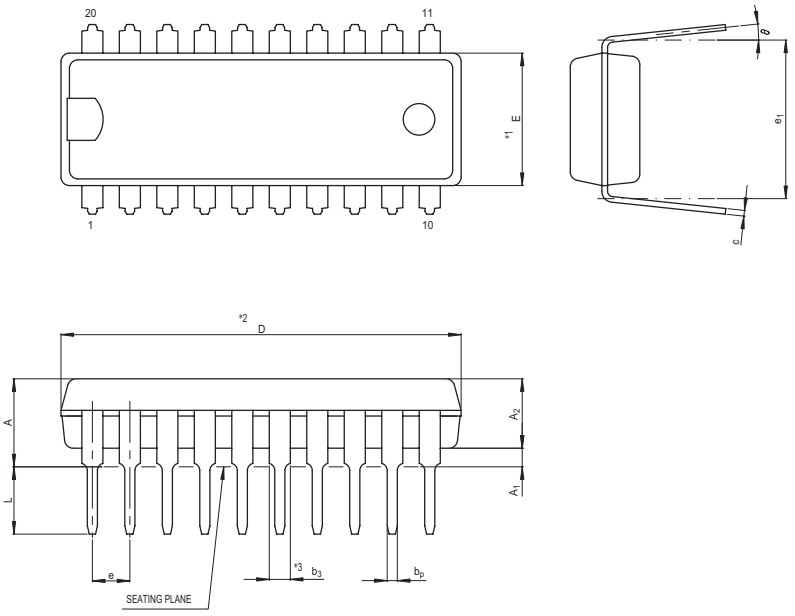

NOTE)
1. DIMENSIONS "*1" AND "*2" DO NOT INCLUDE MOLD FLASH.
2. DIMENSION "*3" DOES NOT INCLUDE TRIM OFFSET.

Reference Symbol	Dimension in Millimeters		
	Min	Nom	Max
e_1	7.32	7.62	7.92
D	18.8	19.0	19.2
E	6.15	6.3	6.45
A	—	—	4.5
A_1	0.51	—	—
A_2	—	3.3	—
b_p	0.38	0.48	0.58
b_3	0.9	1.0	1.3
c	0.22	0.27	0.34
θ	0°	—	15°
e	1.528	1.778	2.028
L	3.0	—	—

JEITA Package Code	RENESAS Code	Previous Code	MASS[Typ.]
P-HWQFN28-5x5-0.50	PWQN0028KA-B	28PJW-B	0.05g

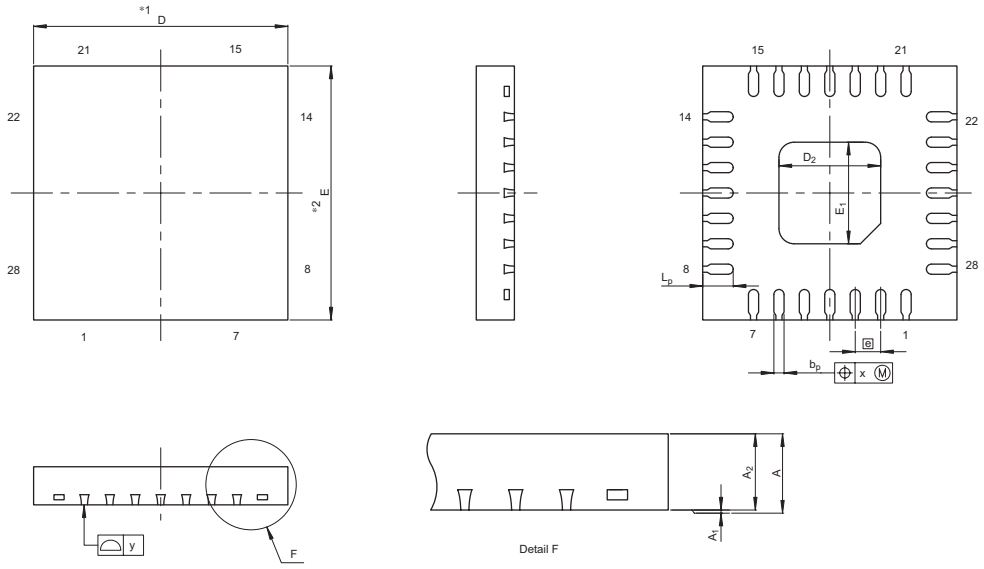

NOTE)
1. DIMENSIONS "*1" AND "*2" DO NOT INCLUDE MOLD FLASH.

Reference Symbol	Dimension in Millimeters		
	Min	Nom	Max
D	4.9	5.0	5.1
E	4.9	5.0	5.1
A_2	—	0.75	—
A	—	—	0.8
A_1	0	0	0.05
b_p	0.15	0.2	0.25
e	—	0.5	—
L_p	0.5	0.6	0.7
x	—	—	0.05
y	—	—	0.05
D_2	—	2.0	—
E_1	—	2.0	—

REVISION HISTORY	R8C/1A Group, R8C/1B Group Datasheet

Rev.	Date	Description	
		Page	Summary
0.10	Feb 18, 2005	–	First Edition issued
0.20	Jun 01, 2005	2, 3	Tables 1.1, 1.2: Item name changed
		9	Table 1.5: Timer C's Pin name revised, Reference Voltage Input Description revised
0.30	Jul 04, 2005	16	Table 4.1 the value after reset revised; 0009h address "XXXXXX00b" → "00h", 000Ah address "00XXX000b" → "00h", 001Eh address "XXXXX000b" → "00h".
		17	Table 4.2 004Fh address; "SSU/IIC Interrupt Control Register, SSUAIC/IIC2AIC, XXXXX000b" added
		18	Table 4.3 the value after reset revised; 00BCh address "00h" → "00h / 0000X000b"
		20 to 39	5. Electrical Characteristics added
1.00	Sep 01, 2005	all pages	"Under development" deleted
		3	Table 1.2 Performance Outline of the R8C/1B Group; Flash Memory: (Data area) → (Data flash) (Program area) → (Program ROM) revised
		4	Figure 1.1 Block Diagram; "Peripheral Function" added, "System Clock Generation" → "System Clock Generator" revised
		5	Table 1.3 Product Information of R8C/1A Group; "(D)" and "(D): Under development" deleted
		6	Table 1.4 Product Information of R8C/1B Group; "(D)" and "(D): Under development" deleted ROM capacity: (Program area) → (Program ROM), (Data area) → (Data flash) revised
		9	Table 1.5 Pin Description; Power Supply Input: "VCC/AVCC" → "VCC", "VSS/AVSS" → "VSS" revised Analog Power Supply Input: added
		11	Figure 2.1 CPU Register; "Reserved Area" → "Reserved Bit" revised
		13	2.8.10 Reserved Area; "Reserved Area" → "Reserved Bit" revised
		15	3.2 R8C/1B Group, Figure 3.2 Memory Map of R8C/1B Group; "Data area" → "Data flash", "Program area" → "Program ROM" revised

REVISION HISTORY	R8C/1A Group, R8C/1B Group Datasheet

Rev.	Date	Description	
		Page	Summary
1.00	Sep 01, 2005	18	Table 4.3 SFR Information(3); 0085h: "Prescaler Z" → "Prescaler Z Register" 0086h: "Timer Z Secondary" → "Timer Z Secondary Register" 0087h: "Timer Z Primary" → "Timer Z Primary Register" 008Ch: "Prescaler X" → "Prescaler X Register" 008Dh: "Timer X" → "Timer X Register" 0090h, 0091h: "Timer C" → "Timer C Register" revised
		21	Table 5.3 A/D Converter Characteristics; V_{ref} and V_{IA}: Standard value, NOTE4 revised
		22	Table 5.4 Flash Memory (Program ROM) Electrical Characteristics; NOTES3 and 5 revised, NOTE8 deleted
		23	Table 5.5 Flash Memory (Data flash Block A, Block B) Electrical Characteristics; NOTES1 and 3 revised
		25	Table 5.8 Reset Circuit Electrical Characteristics (When Using Voltage Monitor 1 Reset); NOTE2 revised
		26	Table 5.10 High-speed On-Chip Oscillator Circuit Electrical Characteristics; "High-Speed On-Chip Oscillator ..." → "High-Speed On-Chip Oscillator Frequency ..." revised, NOTE2 added
		33	Table 5.15 Electrical Characteristics (2) [Vcc = 5V]; NOTE1 deleted
		37	Table 5.22 Electrical Characteristics (4) [Vcc = 3V]; NOTE1 deleted
1.10	Dec 16, 2005	–	Products of PWQN0028KA-B package included
		5, 6	Table 1.3, Table 1.4 revised
		24	Table 5.4 Flash Memory (Program ROM) Electrical Characteristics; NOTE 8 added, Topr → Ambient temperature
		25	Table 5.5 Flash Memory (Data flash Block A, Block B) Electrical Characteristics; NOTE 9 added, Topr → Ambient temperature
		28	Table 5.10 High-speed On-Chip Oscillator Circuit Electrical Characteristics; NOTE 3 added
		29	Table 5.12; tSA and tOR revised, NOTE: 1. VCC = 2.2 to → 2.7 to
		33	Table 5.13; NOTE: 1. VCC = 2.2 to → 2.7 to
		35, 39	Table 5.15, Table 5.22; The title revised, Condition of Stop Mode added
		37, 41	Table 5.19, Table 5.26; td(C-Q) and tsu(D-C) revised
		42, 43	Package Dimensions revised
1.20	Mar 31, 2006	5, 6	Table 1.3, Table 1.4; Type No. added, deleted
		16, 17	Figure 3.1, Figure 3.2; Part Number added, deleted
		24, 25	Table 5.4, Table 5.5; Conditions: VCC = 5.0 V at Topr = 25 °C deleted,
1.30	Oct 03, 2006	all pages	Y version added Factory programming product added

REVISION HISTORY	R8C/1A Group, R8C/1B Group Datasheet

Rev.	Date	Description	
		Page	Summary
1.30	Oct 03, 2006	1	1.1 “portable equipment” added
		2, 3	Table 1.1, Table 1.2; Specification Interrupts: “Internal: 9 sources” → “Internal: 11 sources”
		24	Table 5.2; Parameter: System clock added
		45	Package Dimensions; PWQN0028KA-B revised
1.40	Dec 08, 2006	20	Table 4.1; 000Fh: After reset “000XXXXXb” → “00X11111b”
		24	Table 19.2; Parameter: OCD2 = 1 On-chip oscillator clock selected revised

Renesas Technology Corp. Sales Strategic Planning Div. Nippon Bldg., 2-6-2, Ohte-machi, Chiyoda-ku, Tokyo 100-0004, Japan

Notes:
1. This document is provided for reference purposes only so that Renesas customers may select the appropriate Renesas products for their use. Renesas neither makes warranties or representations with respect to the accuracy or completeness of the information contained in this document nor grants any license to any intellectual property rights or any other rights of Renesas or any third party with respect to the information in this document.
2. Renesas shall have no liability for damages or infringement of any intellectual property or other rights arising out of the use of any information in this document, including, but not limited to, product data, diagrams, charts, programs, algorithms, and application circuit examples.
3. You should not use the products or the technology described in this document for the purpose of military applications such as the development of weapons of mass destruction or for the purpose of any other military use. When exporting the products or technology described herein, you should follow the applicable export control laws and regulations, and procedures required by such laws and regulations.
4. All information included in this document such as product data, diagrams, charts, programs, algorithms, and application circuit examples, is current as of the date this document is issued. Such information, however, is subject to change without any prior notice. Before purchasing or using any Renesas products listed in this document, please confirm the latest product information with a Renesas sales office. Also, please pay regular and careful attention to additional and different information to be disclosed by Renesas such as that disclosed through our website. (http://www.renesas.com)
5. Renesas has used reasonable care in compiling the information included in this document, but Renesas assumes no liability whatsoever for any damages incurred as a result of errors or omissions in the information included in this document.
6. When using or otherwise relying on the information in this document, you should evaluate the information in light of the total system before deciding about the applicability of such information to the intended application. Renesas makes no representations, warranties or guaranties regarding the suitability of its products for any particular application and specifically disclaims any liability arising out of the application and use of the information in this document or Renesas products.
7. With the exception of products specified by Renesas as suitable for automobile applications, Renesas products are not designed, manufactured or tested for applications or otherwise in systems the failure or malfunction of which may cause a direct threat to human life or create a risk of human injury or which require especially high quality and reliability such as safety systems, or equipment or systems for transportation and traffic, healthcare, combustion control, aerospace and aeronautics, nuclear power, or undersea communication transmission. If you are considering the use of our products for such purposes, please contact a Renesas sales office beforehand. Renesas shall have no liability for damages arising out of the uses set forth above.
8. Notwithstanding the preceding paragraph, you should not use Renesas products for the purposes listed below:
   (1) artificial life support devices or systems
   (2) surgical implantations
   (3) healthcare intervention (e.g., excision, administration of medication, etc.)
   (4) any other purposes that pose a direct threat to human life
   Renesas shall have no liability for damages arising out of the uses set forth in the above and purchasers who elect to use Renesas products in any of the foregoing applications shall indemnify and hold harmless Renesas Technology Corp., its affiliated companies and their officers, directors, and employees against any and all damages arising out of such applications.
9. You should use the products described herein within the range specified by Renesas, especially with respect to the maximum rating, operating supply voltage range, movement power voltage range, heat radiation characteristics, installation and other product characteristics. Renesas shall have no liability for malfunctions or damages arising out of the use of Renesas products beyond such specified ranges.
10. Although Renesas endeavors to improve the quality and reliability of its products, IC products have specific characteristics such as the occurrence of failure at a certain rate and malfunctions under certain use conditions. Please be sure to implement safety measures to guard against the possibility of physical injury, and injury or damage caused by fire in the event of the failure of a Renesas product, such as safety design for hardware and software including but not limited to redundancy, fire control and malfunction prevention, appropriate treatment for aging degradation or any other applicable measures. Among others, since the evaluation of microcomputer software alone is very difficult, please evaluate the safety of the final products or system manufactured by you.
11. In case Renesas products listed in this document are detached from the products to which the Renesas products are attached or affixed, the risk of accident such as swallowing by infants and small children is very high. You should implement safety measures so that Renesas products may not be easily detached from your products. Renesas shall have no liability for damages arising out of such detachment.
12. This document may not be reproduced or duplicated, in any form, in whole or in part, without prior written approval from Renesas.
13. Please contact a Renesas sales office if you have any questions regarding the information contained in this document, Renesas semiconductor products, or if you have any other inquiries.

RENESAS SALES OFFICES

http://www.renesas.com

Refer to "**http://www.renesas.com/en/network**" for the latest and detailed information.

Renesas Technology America, Inc.
450 Holger Way, San Jose, CA 95134-1368, U.S.A
Tel: <1> (408) 382-7500, Fax: <1> (408) 382-7501

Renesas Technology Europe Limited
Dukes Meadow, Millboard Road, Bourne End, Buckinghamshire, SL8 5FH, U.K.
Tel: <44> (1628) 585-100, Fax: <44> (1628) 585-900

Renesas Technology (Shanghai) Co., Ltd.
Unit 204, 205, AZIACenter, No.1233 Lujiazui Ring Rd, Pudong District, Shanghai, China 200120
Tel: <86> (21) 5877-1818, Fax: <86> (21) 6887-7898

Renesas Technology Hong Kong Ltd.
7th Floor, North Tower, World Finance Centre, Harbour City, 1 Canton Road, Tsimshatsui, Kowloon, Hong Kong
Tel: <852> 2265-6688, Fax: <852> 2730-6071

Renesas Technology Taiwan Co., Ltd.
10th Floor, No.99, Fushing North Road, Taipei, Taiwan
Tel: <886> (2) 2715-2888, Fax: <886> (2) 2713-2999

Renesas Technology Singapore Pte. Ltd.
1 Harbour Front Avenue, #06-10, Keppel Bay Tower, Singapore 098632
Tel: <65> 6213-0200, Fax: <65> 6278-8001

Renesas Technology Korea Co., Ltd.
Kukje Center Bldg. 18th Fl., 191, 2-ka, Hangang-ro, Yongsan-ku, Seoul 140-702, Korea
Tel: <82> (2) 796-3115, Fax: <82> (2) 796-2145

Renesas Technology Malaysia Sdn. Bhd
Unit 906, Block B, Menara Amcorp, Amcorp Trade Centre, No.18, Jalan Persiaran Barat, 46050 Petaling Jaya, Selangor Darul Ehsan, Malaysia
Tel: <603> 7955-9390, Fax: <603> 7955-9510

© 2006. Renesas Technology Corp., All rights reserved. Printed in Japan.

Colophon .7.0

Mouser Electronics

Authorized Distributor

Click to View Pricing, Inventory, Delivery & Lifecycle Information:

Renesas Electronics:

R5F211B2NP#U0 R5F211B4SP#U0 R5F211B4DSP#U0 R5F211B2SP#W4 R5F211B2SP#U0 R5F211B1SP#W4 R5F211B3DSP#U0 R5F211B3SP#U0 R5F211B3NP#U0 R5F211B1DSP#U0 R5F211B4NP#U0 R5F211B4SP#W4 R5F211B1SP#U0 R5F211B4DSP#W4 R5F211B2DSP#U0