KYCON, Inc. 1810 Little Orchard Street, San Jose, CA 95125 (408)494-0330

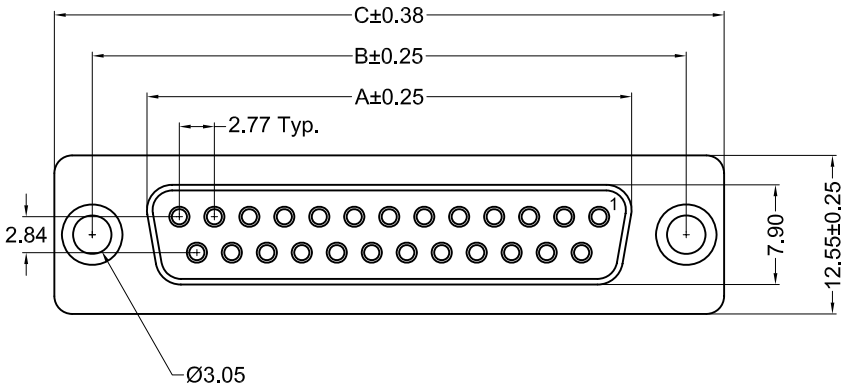

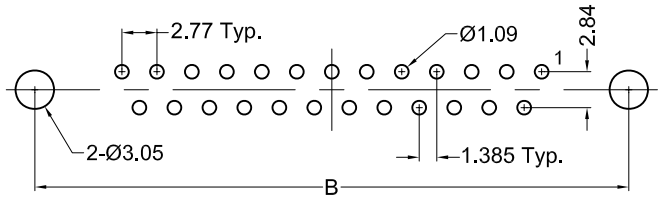

Recommended PCB Layout
(Top View)

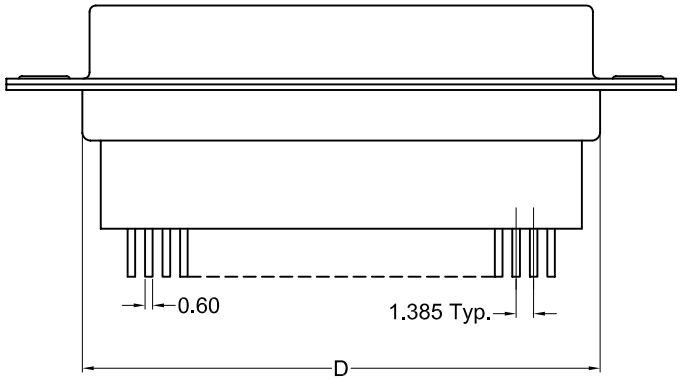

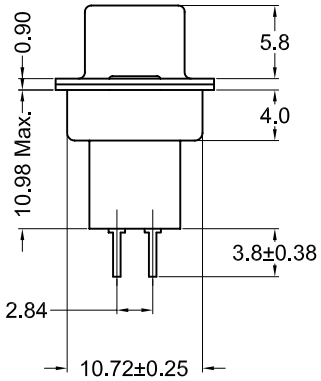

Part Number	Dimensions				Plating Options	
	A	B	C	D		
K88X-ED-9S/-15/-30	16.33	24.99	30.81	19.2	Blank	Gold Flash
K88X-AD-15S/-15/-30	24.66	33.32	39.14	27.5	15	15u" Gold
K88X-BD-25S/-15/-30	38.38	47.04	53.04	41.0	30	30u" Gold
K88X-CD-37S/-15/-30	54.84	63.50	69.32	57.7		

Material and Finish

Shell: Steel, tin plated

Insulator: PBT thermoplastic with glass-fiber reinforcement, UL94V-0 rated
Color: Black

Contact Material:
Socket - Phosphor Bronze

Contact Plating Options:

Standard: gold flash on mating end, tin on termination end, nickel underplate on entire contact

15 Option: 15u" gold on mating end, tin on termination end, nickel underplate on entire contact

30 Option: 30u" gold on mating end, tin on termination end, nickel underplate on entire contact

Electrical Specifications

Rated Current: 2A

Rated Voltage: 30V RMS

Insulation Resistance:
more than 1000 megohms at 500V DC

Contact Resistance:
13 milliohms max.

Dielectric Withstanding Voltage:
1000V for 1 minute

Operating Temperature:
-55°C to +105°C

RoHS COMPLIANT
EU Directive 2002/95/EC

C US
LR78160

Tolerances
X.X ± 0.25
X.XX ± 0.15
Unless Stated Otherwise

REV.	DATE	DESCRIPTION	REV. BY	CHK. BY	DRAWN BY	DATE
A1	08/14/09	New Drawing	S. Vien	H. MA	S. Vien	05/29/09
A2	12/08/10	ECO# 10-091	S. Vien	H. MA		
					UNITS	
					mm	

K88X-xD-xxS

D-Sub, Vertical, High Profile

Female, RoHS Compliant

KYCON