ALUMINUM ELECTROLYTIC CAPACITORS
Subminiature • Radial Lead

RSM

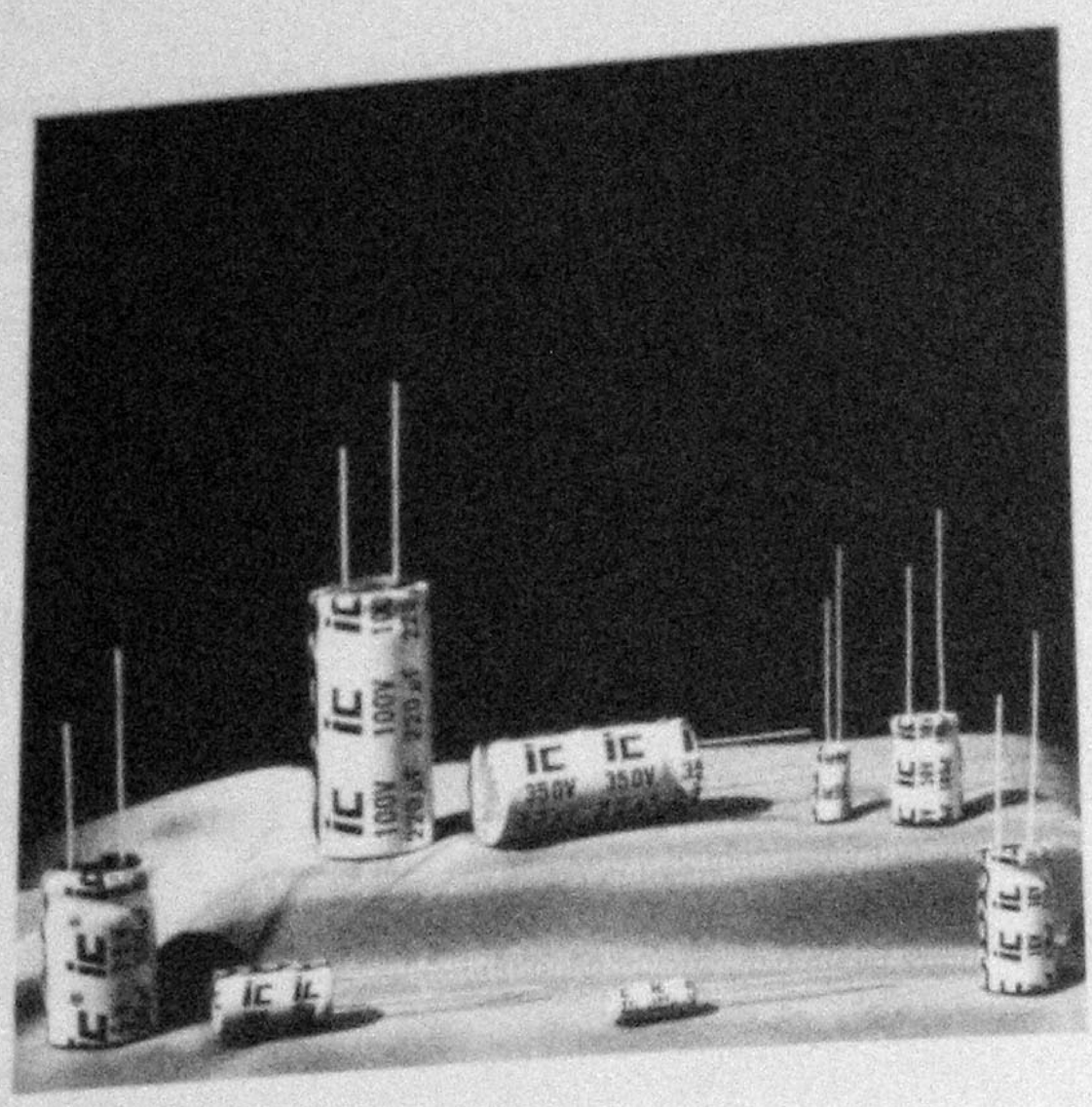

SPECIFICATIONS:

Capacitance Range:
0.47 Mfd. to 10,000 Mfd.

Voltage Range:
6.3 WVDC to 450 WVDC

Capacitance Tolerance:
All Values: ±20% (M) Standard
All Values: ±10% (K) Optional
All Values: −10%, +30% (Q) Optional

Leakage Current:
≤0.006CV or 2μA min. (≤100 WVDC)
≤0.006CV + 10μA min. (>100 WVDC)

Operating Temperature:
−40°C to +85°C

Storage Temperature:
−55°C to +85°C

FEATURES:

IC type RSM radial lead aluminum electrolytic capacitors are found in industrial and commercial designs requiring continuous duty performance without any decrease in quality. The extended endurance rating of 2000 hrs. at +85°C offers the user significant product life extension. Leakage current is comparable to many competitive "low" leakage capacitors. The use of modern materials and fabrication technology combine together to produce type RSM at a cost competitive affordable price. Type RSM is widely used for new designs and for industrial replacement applications. Perfect as a filter or coupling capacitor, type RSM finds application in a wide range of products including avionics, computers, entertainment, telecommunications, instrumentation, telemetry, etc. Type RSM is the standard for top quality performance.

SPECIAL ORDER OPTIONS

- Solvent Tolerant Seal
- Epoxy End Seal (RSM-PX)
- Tape & Reel
- Tape—Ammo (flat) pack
- MYLAR® Polyester Sleeve
- Cut Leads
- Special Tolerances

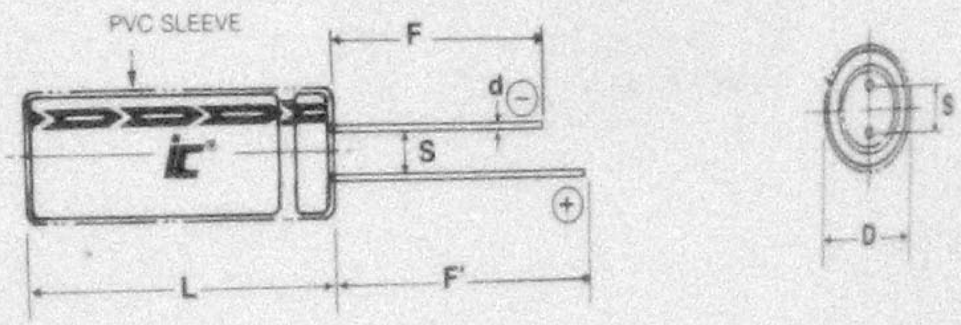

The source for Quality, Performance and Delivery

ILLINOIS CAPACITOR, INC.
3757 West Touhy Avenue, Lincolnwood, Illinois 60645 • (312) 675-1760 • Telex 72-4361

ELECTRICAL SPECIFICATIONS

1.0 GENERAL PARAMETERS

Capacitance Range:	0.47 Mfd. to 10,000 Mfd.
Voltage Range:	6.3 WVDC to 450 WVDC
Operating Temperature (Rated Voltage)	− 40 °C to + 85 °C
Storage Temperature:	− 40 °C to + 85 °C

2.0 CAPACITANCE TOLERANCE + 25°C, 120 Hz

Capacity	Tolerance
All Values	± 20% Standard (M)
All Values	± 10% Optional (K)
All Values	− 10%, + 30% Optional (Q)

Other tolerances are available on special order

STANDARD TEST PROCEDURE

TEST METHOD: Capacitance, Dissipation Factor (DF), ESR and Impedance (Z) shall be measured using the bridge method under the following test conditions.

Temperature: + 25 °C (+ 0, − 5 °C)
Frequency: 120 Hz (+ 10, − 5 Hz)
Bias: Zero
Test Voltage: ≤ 0.5VRMS

3.0 DISSIPATION FACTOR DF (TAN δ) + 25°C, 120 Hz

MFD \ WV(SV)	6.3(8)	10(13)	16(20)	25(32)	35(44)	50(63)	63(79)	80(100)	100(125)	160(200)	250(300)	350(400)	450(500)
0.47	→	→	→	→	→	.10	→	→	.08				
1.0	→	→	→	→	→	.10	→	→	.08	.12	.12	→	.20
1.5	→	→	→	→	→	.10							
2.2	→	→	→	→	→	.10	→	→	.08	.12	→	.20	.20
3.3	→	→	→	→	→	.10	→	→	.08	→	.12	.20	.20
4.7	→	→	→	→	→	.10	→	→	.08	→	.12	.20	.20
6.8	→	→	→	→	→	.10	→	→	.08				
10	→	→	→	→	.12	.10	.10	→	.08	.12	.12	.20	.20
15	→	→	→	→	.12	.10	→	→	.08				
22	→	→	→	.15	.12	.10	.10	→	.08	.12	.12	.20	.20
33	→	→	.17	→	.12	.10	.10	→	.08	.12	.12	.20	
47	→	.20	→	.15	→	.10	.10	.10	.08	.12	.12		
68	→	→	.17	→	.12	.10	→	→	.08				
100	→	.20	→	.15	.12	.10	.10	→	.08	.12	.12		
150	→	→	.17	.15	.12	.10	→	.10	.08				
220	→	.20	.17	.15	.12	.10	.10	.10	.08				
330	→	.20	.17	.15	.12	.10	.10	.10	.08				
470	.24	.20	.17	.15	.12	.10	.10	.10	.08				
680	.24	.20	.17	.15	.12	.10	.10	.10					
1,000	.24	.20	.17	.15	.12	.10	.10						
1,500	→	.22	.19	.17	.14	.12							
2,200	.28	.24	.21	.19	.16								
3,300	.30	.26	.23	.21									
4,700	.32	.28	.25										
6,800	.36	.32											
10,000	.44												

4.0 E.S.R. MAXIMUM EQUIVALENT SERIES RESISTANCE (Ω)

(+ 25°C, 120 Hz) Nominal Capacitance, Maximum Dissipation Factor

MFD \ WV(SV)	6.3(8)	10(13)	16(20)	25(32)	35(44)	50(63)	63(79)	80(100)	100(125)	160(200)	250(300)	350(400)	450(500)
0.47	→	→	→	→	→	282.34	→	→	225.87				
1.0	→	→	→	→	→	132.70	→	→	106.16	159.20	159.20	→	265.41
1.5	→	→	→	→	→	88.46							
2.2	→	→	→	→	→	60.31	→	→	48.28	72.42	→	120.62	120.62
3.3	→	→	→	→	→	40.21	→	→	32.18	→	48.25	80.42	80.42
4.7	→	→	→	→	→	28.23	→	→	22.59	→	33.88	56.46	56.46
6.8	→	→	→	→	→	19.52	→	→	15.61				
10	→	→	→	→	15.92	13.27	13.27	→	10.62	15.92	15.92	26.54	26.54
15	→	→	→	→	10.62	8.84	→	→	7.08				
22	→	→	→	9.05	7.42	6.03	6.03	→	4.83	7.24	7.24	12.06	12.06
33	→	→	6.83	→	4.83	4.02	4.02	→	3.22	4.83	4.83	8.04	
47	→	5.64	→	4.23	→	2.82	2.82	2.28	2.26	3.39	3.39		
68	→	→	3.31	→	2.34	1.95	→	→	1.56				
100	→	2.65	→	1.99	1.59	1.32	1.32	→	1.06	1.59	1.59		
150	→	→	1.50	1.33	1.06	.88	→	.88	.71				
220	→	1.20	1.02	.91	.72	.60	.60	.60	.48				
330	→	.80	.68	.61	.48	.40	.40	.40	.32				
470	.68	.56	.47	.43	.34	.28	.28	.28	.23				
680	.47	.39	.33	.29	.23	.20	.20	.20					
1,000	.32	.26	.22	.20	.16	.13	.13						
1,500	→	.19	.17	.15	.12	.11							
2,200	.17	.14	.13	.12	.10								
3,300	.12	.11	.09	.08									
4,700	.09	.08	.07										
6,800	.07	.06											
10,000	.06												

5.0 IMPEDANCE (Z) vs. FREQUENCY

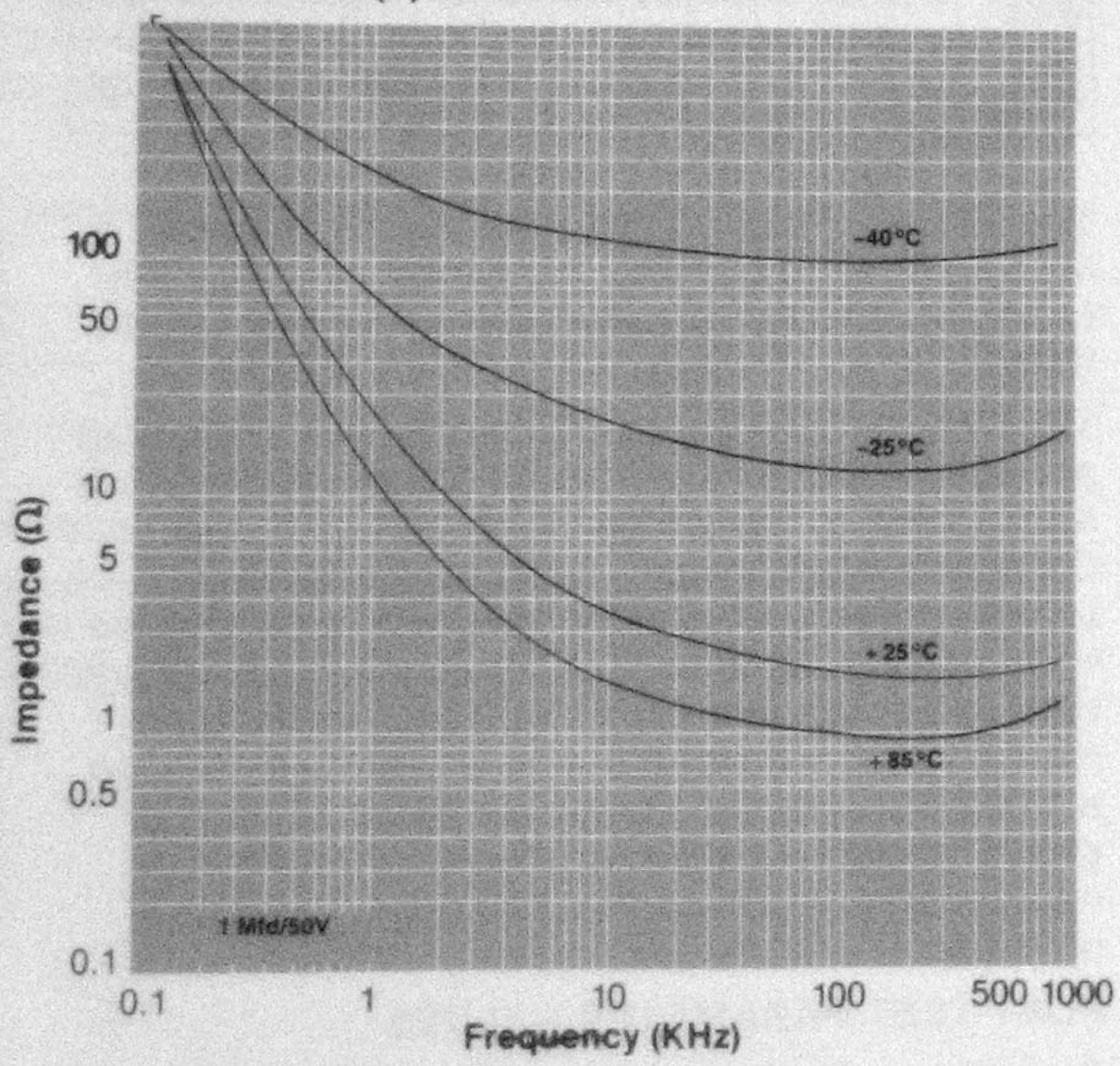

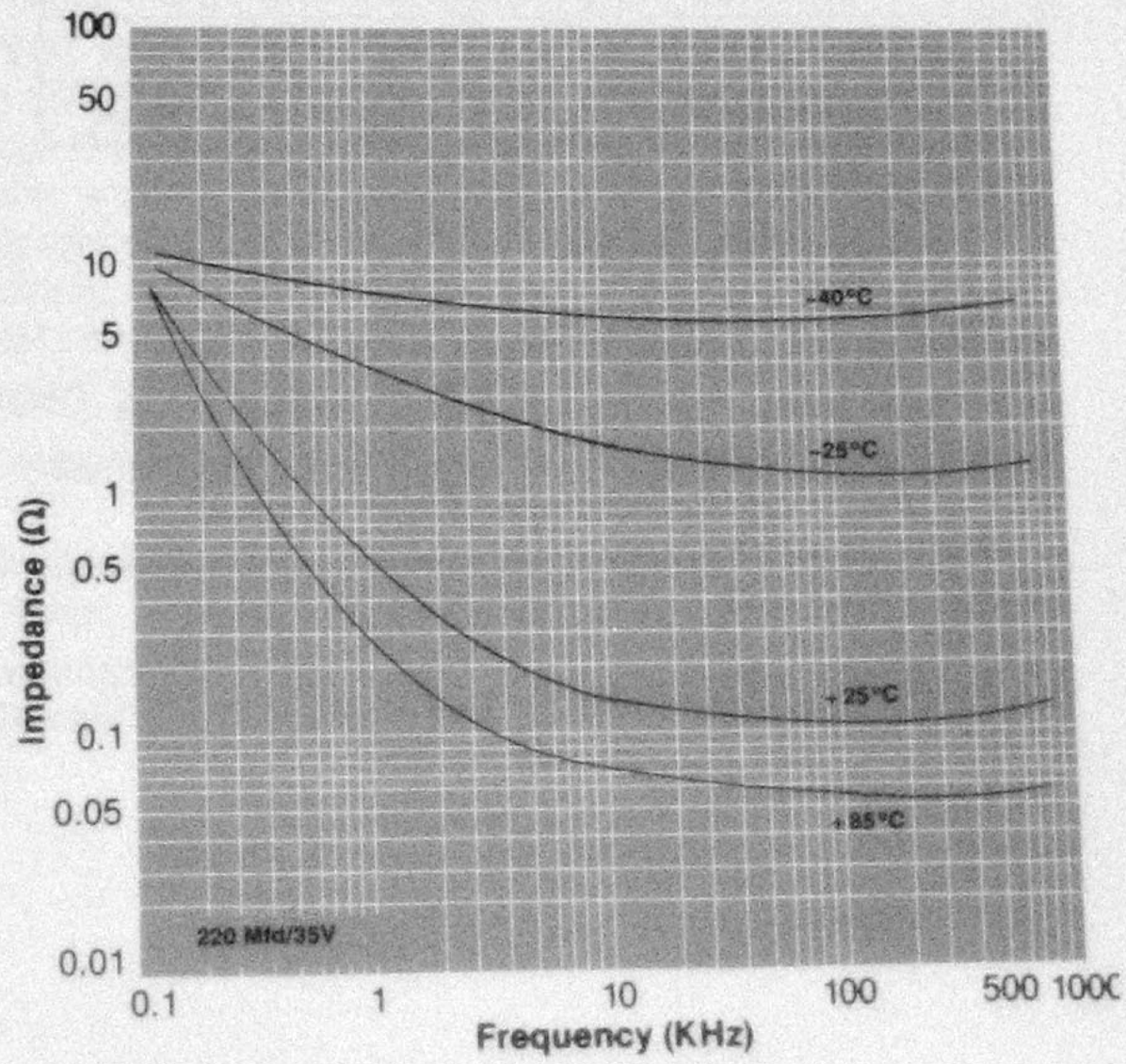

Note: These graphs reflect typical measurements.

6.0 LEAKAGE CURRENT Maximum uA (+ 25°C, Rated Voltage @ 5 minutes)

MFD \ WV(SV)	6.3(8)	10(13)	16(20)	25(32)	35(44)	50(63)	63(79)	80(100)	100(125)	160(200)	250(300)	350(400)	450(500)
0.47	→	→	→	→	→	2	→	→	2				
1.0	→	→	→	→	→	2	→	→	2	12	12	→	13
1.5	→	→	→	→	→	2							
2.2	→	→	→	→	→	2	→	→	2	13	→	15	16
3.3	→	→	→	→	→	2	→	→	2	→	15	17	19
4.7	→	→	→	→	→	2	→	→	3	→	18	20	23
6.8	→	→	→	→	→	3	→	→	5				
10	→	→	→	→	3	3	4	→	6	20	25	31	37
15	→	→	→	→	4	5	→	→	9				
22	→	→	→	4	5	7	9	→	14	32	43	57	70
33	→	→	4	→	7	10	13	→	20	42	60	80	
47	→	3	→	8	→	15	18	23	28	56	81		
68	→	→	7	→	15	21	→	→					
100	→	6	→	15	21	30	38	→	60	106	160		
150	→	→	15	23	32	45	→	72	90				
220	→	14	22	33	47	66	84	106	132				
330	→	20	32	50	70	99	125	159	198				
470	18	29	46	71	99	141	178	226	282				
680	26	41	66	102	143	204	257	327					
1,000	38	60	96	150	210	300	378						
1,500	→	90	144	225	315	450							
2,200	83	132	212	330	462								
3,300	125	198	317	495									
4,700	178	282	452										
6,800	258	408											
10,000	378												

6.1 LEAKAGE CURRENT CALCULATIONS

Leakage Current	
≤ 100 WVDC	I_L ≤ .006CV or 2uA*
> 100 WVDC	I_L ≤ .006CV + 10uA

*Whichever value is greater

I_L = Leakage Current (uA)
C = Capacitance (Mfd.)
V = Rated D.C. Voltage (WVDC)

TEST METHOD: Capacitors to be preconditioned at + 25°C at rated voltage for 30 min. and not less than 18 hrs nor more than 24 hours prior to testing Leakage Current shall be measured 5 minutes after application of voltage.

7.0 REVERSE VOLTAGE

Reverse voltage should not exceed 1.5 volts.

8.0 SURGE VOLTAGE (SV)

Rated WVDC	6.3	10	16	25	35	50	63	80	100	160	250	350	450
Surge Voltage	8	13	20	32	44	63	79	100	125	200	300	400	500

The Surge Voltage is the maximum voltage including peak ripple and transients to which the capacitor should be subjected under any conditions.

TEST METHOD: Capacitors shall be preconditioned at rated WVDC at + 25°C for a 30 minute period at least 18 but no more than 24 hours prior to testing. Capacitors will withstand 1,000 cycles of surge voltage application at + 85°C. Each cycle shall be of 30 seconds duration. The maximum surge voltage shall be applied through a 1,000 ohm resistor, immediately followed by a 5 minute discharge through a 1,000 ohm resistor. Upon completion of the test cycles, capacitors shall be allowed to cool for 30 minutes after which post-test measurements shall be made.

POST TEST PARAMETER VALUES

Capacitance Change: ΔC ≤ 20% initial value
Dissipation Factor: ≤ 200% + 25°C specification
Leakage Current: ≤ 200% + 25°C specification

9.0 RMS RIPPLE CURRENT mA (85°C, 120 Hz) Peak Voltage not to exceed rated DC voltage

WV(SV) / MFD	6.3(8)	10(13)	16(20)	25(32)	35(44)	50(63)	63(79)	80(100)	100(125)	160(200)	250(300)	350(400)	450(500)
0.47													
1.0						9			9				
1.5						15			17	17	18		30
2.2						18							
3.3						24			27	28		40	50
4.7						30			44		47	60	75
6.8						35			50		55	75	90
10						48			75				
15					60	61	60		100	89	100	150	175
22					83	86			135				
33				80	105	110	120		170	175	180	230	290
47			100		140	150	155		210	220	235	300	
68		83		140		190	210	220	320	295	330		
100			165		235	260			400				
150		146		250	290	330	340		470	505	550		
220			270	325	390	440		480	610				
330		260	335	400	480	545	550	600	750				
470		340	425	495	580	700	720	860	980				
680	420	440	575	725	780	900	920	1,000	1,200				
1,000	480	560	790	890	940	1,025	1,150	1,280					
1,500	550	720	1,000	1,150	1,200	1,250	1,550						
2,200		920	1,250	1,425	1,625	1,705							
3,300	940	1,250	1,495	1,745	1,960								
4,700	1,230	1,600	1,800	2,035									
6,800	1,650	1,885	2,190										
10,000	1,980	2,190											
	2,240												

9.1 RIPPLE CURRENT MULTIPLIER

Note: When operated at temperatures below +85°C or at frequencies higher than 120Hz RMS Ripple Current may be increased by the multiplier shown below.

Temperature	Multiplier[1]	Frequency	Multiplier[2]
+30°	2.2	60Hz	0.90
+45°	1.8	600Hz	1.15
+65°	1.4	1KHz	1.35
+70°	1.3	10KHz	1.55

1) 120Hz only

2) +85°C only

Caution: The surface temperature of the Capacitor shall not rise more than 10°C above the ambient temperature and shall never exceed +85°C.

9.2 RIPPLE CURRENT TEST

(500 hrs., +85°C dry circulating air, at maximum rated voltage and maximum ripple current.)

TEST METHOD: Capacitors shall be preconditioned at rated voltage for 30 min. prior to beginning the test. Parameters shall be measured in accordance with +25°C standard test procedures. Upon completion of the test, capacitors shall be allowed to cool to room temperature +25°C for 24 hours. Post test readings shall then be measured.

POST TEST PARAMETER VALUES

Capacitance:	≤100WVDC, Δ C≤30% initial readings >100WVDC, Δ C≤25% initial readings
Dissipation Factor:	≤100WVDC, DF ≤200% +25°C Specification >100WVDC, DF ≤250% +25°C Specification
Leakage Current:	≤200% Max. Values @ +25°C spec

ENVIRONMENTAL PERFORMANCE

10.0 OPERATING TEMPERATURE

IC type RSM capacitors are designed for operational use over the temperature range of −40°C to +85°C.

10.1 STORAGE TEMPERATURE

IC type RSM capacitors can be transported and stored at temperatures ranging from −40°C to +85°C for brief periods without permanent damage. Capacitors stored for periods exceeding 18 months should be checked in accordance with standard procedures and specifications prior to use.

10.2 CAPACITANCE CHANGE (△C): −25°C

WVDC	△C%
≤ 100	25%
160	30%
250	35%
350,450	50%

10.3 CAPACITANCE CHANGE (△C): −40°C

≤ 100WVDC	△C ≤ 40%

10.4 IMPEDANCE RATIO (MAXIMUM)

WVDC	TEMPERATURE RATIO	
	−25 °C/ + 25 °C	−40 °C/ + 25 °C
6.3	4	10
10	3	8
16	2	6
25	2	4
35-50	2	3
63-100	2	3
160-250	2	—
350-450	2	—

TEST METHOD: Capacitors shall reach equilibrium at −25°C. Capacitance and impedance shall be measured at 120 Hz, zero bias and ≤ .5VRMS using the bridge method.

Impedance $(Z) = \sqrt{(ESR)^2 + (X_c)^2}$

Capacitive Reactance $(X_c) = \frac{1}{2\pi fC}$

$(ESR) = (X_c) \bullet (DF)$

C = Capacitance in Farads

f = frequency in Hertz

DF = Dissipation Factor (decimal equivalent)

CAPACITANCE CHANGE (△C%) vs. TEMPERATURE

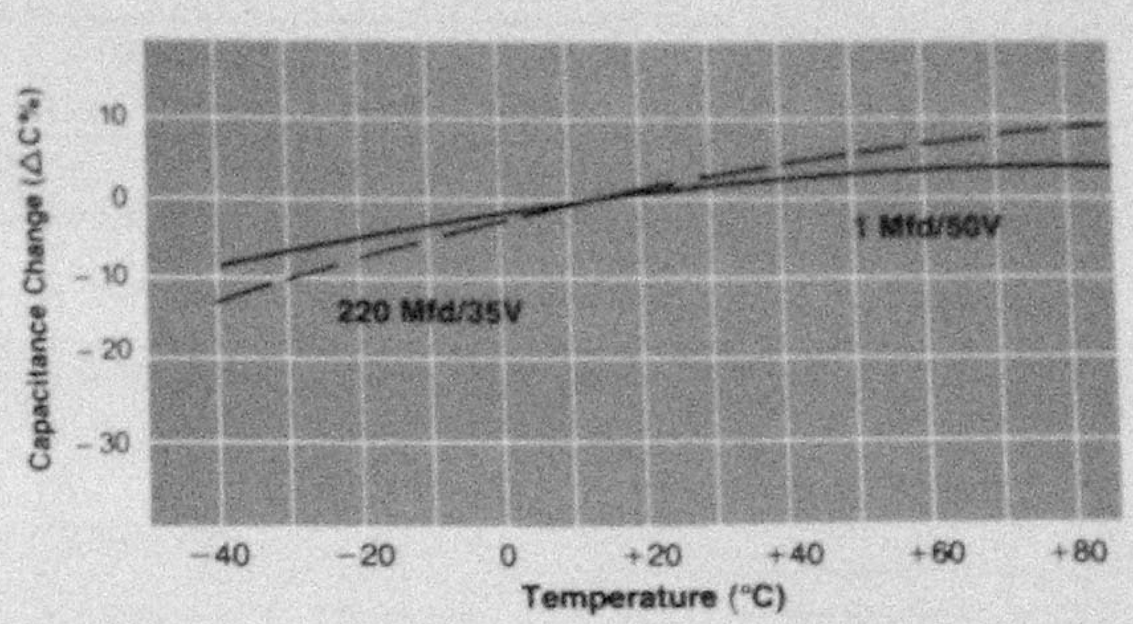

DISSIPATION FACTOR (Tan δ) vs. TEMPERATURE

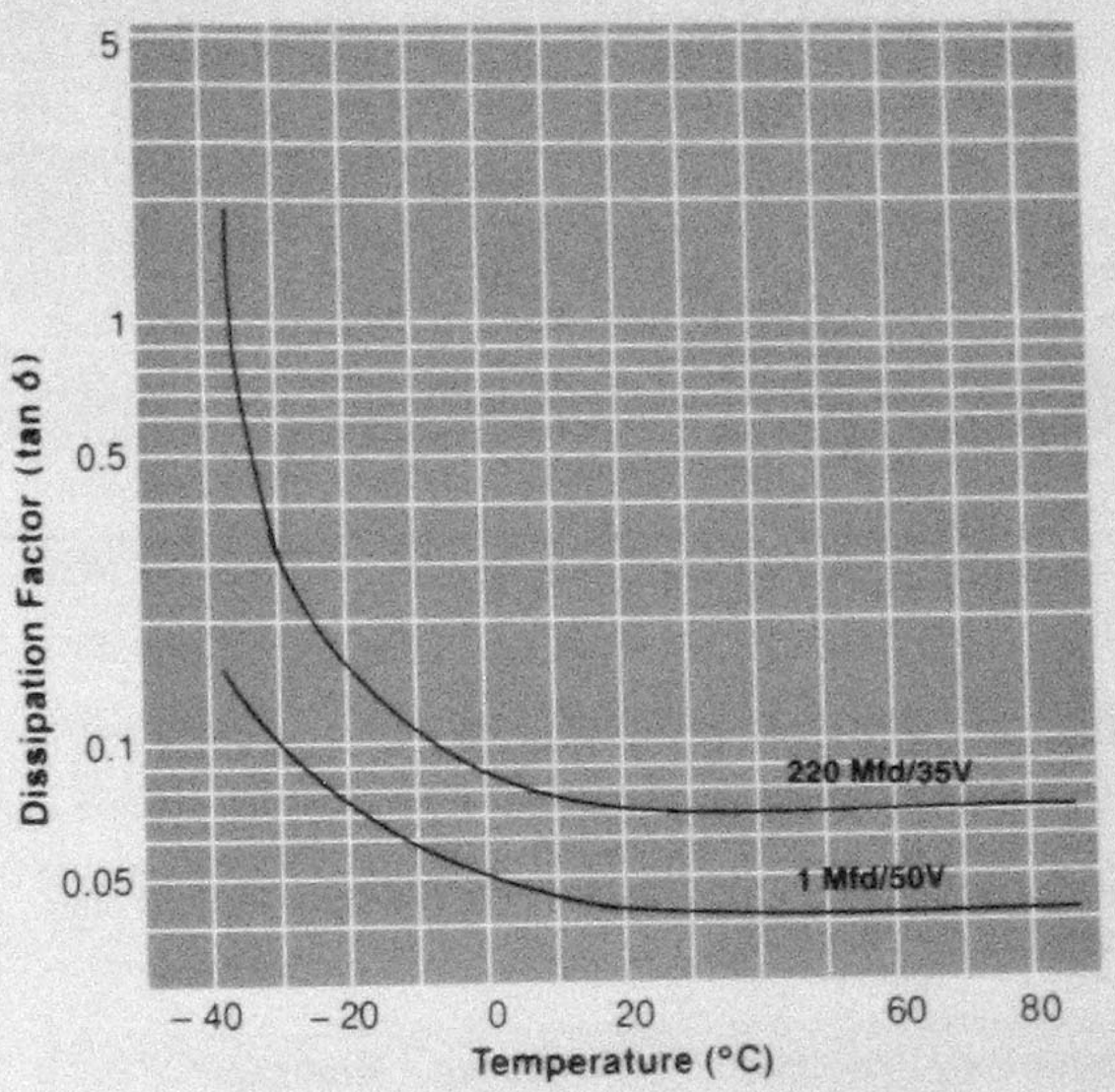

LEAKAGE CURRENT vs. TEMPERATURE

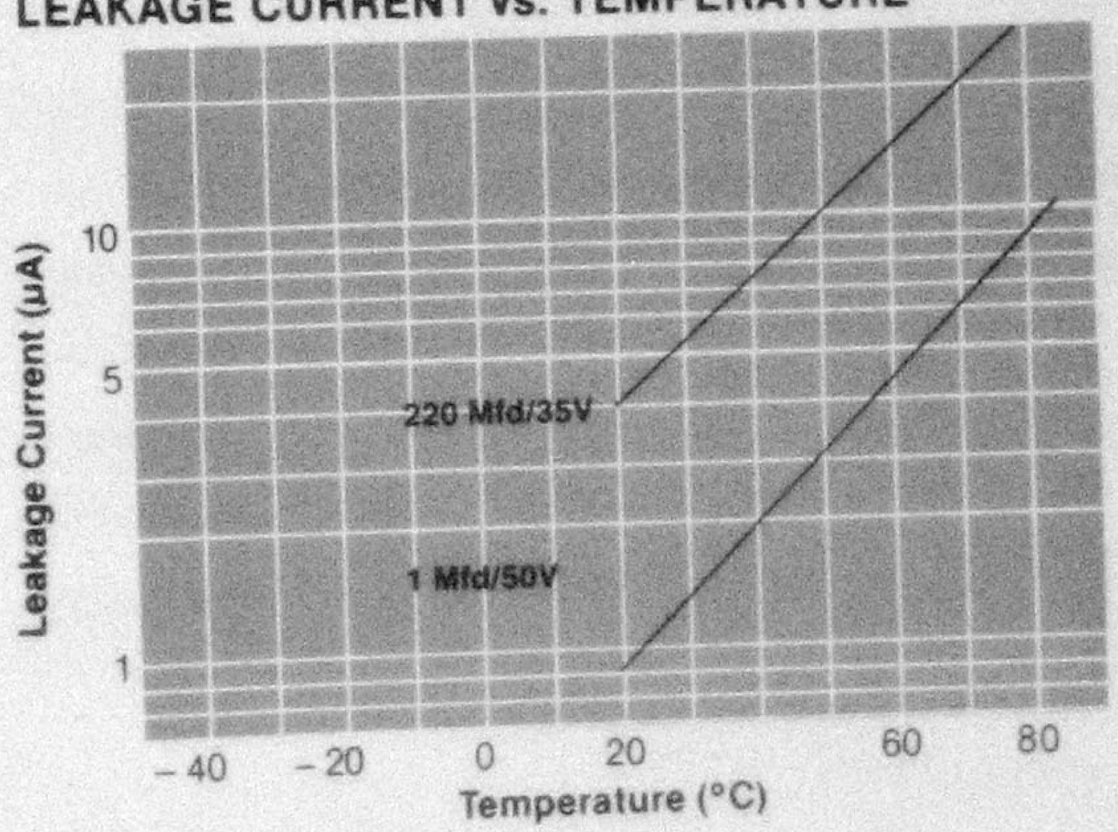

Note: These graphs reflect typical measurements.

11.0 ENDURANCE TEST
(2,000 hrs., dry circulating air, @ rated voltage)

TEST METHOD: Capacitors shall be preconditioned at rated voltage for 30 min. prior to beginning the test. Parameters shall be measured in accordance with standard test procedures at +25°C. Upon completion of the test, capacitors shall be allowed to cool to room temperature +25°C for 24 hours. Post test readings shall then be measured.

11.1 2,000 HOURS @ +85°C
POST TEST PARAMETER VALUES

Capacitance:	≤16WVDC, Δ C≤30% initial readings ≥25WVDC, Δ C≤25% initial readings
Dissipation Factor:	≤16WVDC, DF ≤200% +25°C Specification ≥25WVDC, DF ≤250% +25°C Specification
Leakage Current:	≤ +25°C Max. allowable values

12.0 SHELF LIFE TEST
(1,000 hrs., +85°C, no applied voltage)

TEST METHOD: Capacitors shall be preconditioned at rated voltage for 30 min. prior to beginning the test. Parameters shall be measured in accordance with standard test procedures at +25°C. Upon completion of the test, capacitors shall be allowed to cool to room temperature +25°C for 24 hours. Capacitors shall be preconditioned at rated voltage for 30 min. prior to post test readings.

POST TEST PARAMETER VALUES

Capacitance:	△C ≤20% initial readings
Dissipation Factor:	≤250% +25°C Specification
Leakage Current:	≤350% +25°C Specification

CAPACITANCE CHANGE (△C%) vs. TIME

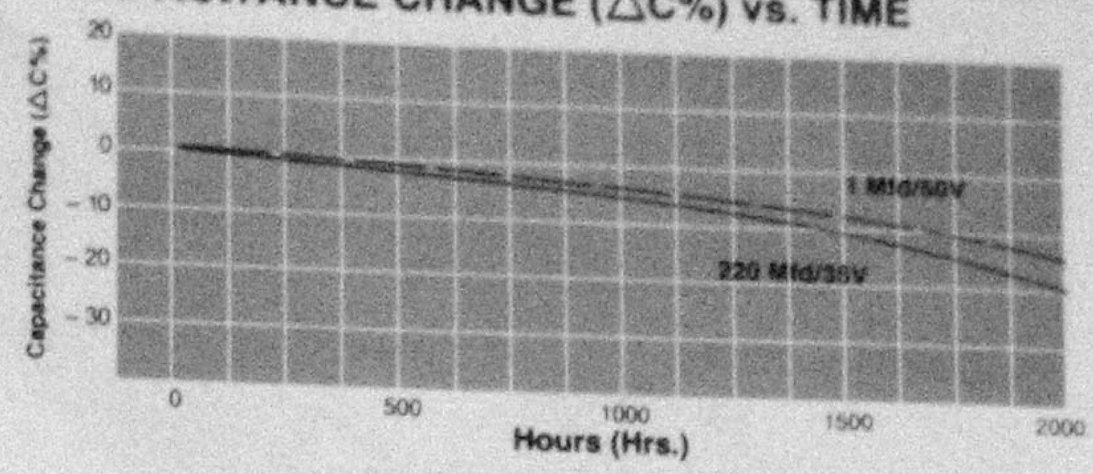

DISSIPATION FACTOR (Tan δ) vs. TIME

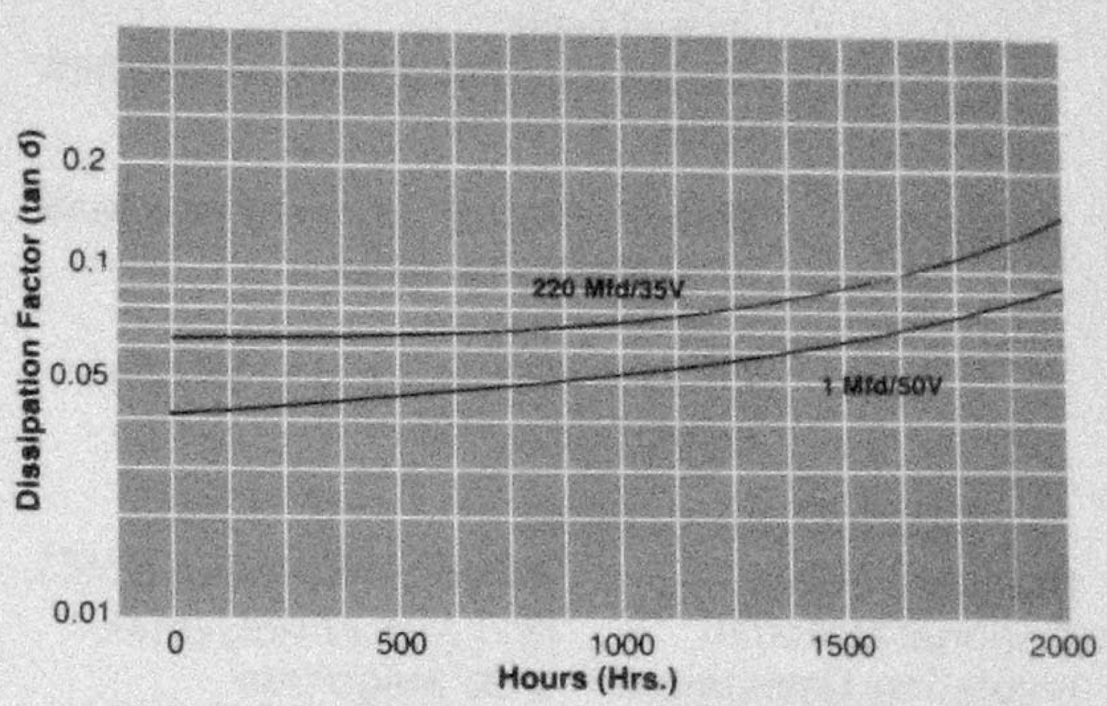

LEAKAGE CURRENT vs. TIME

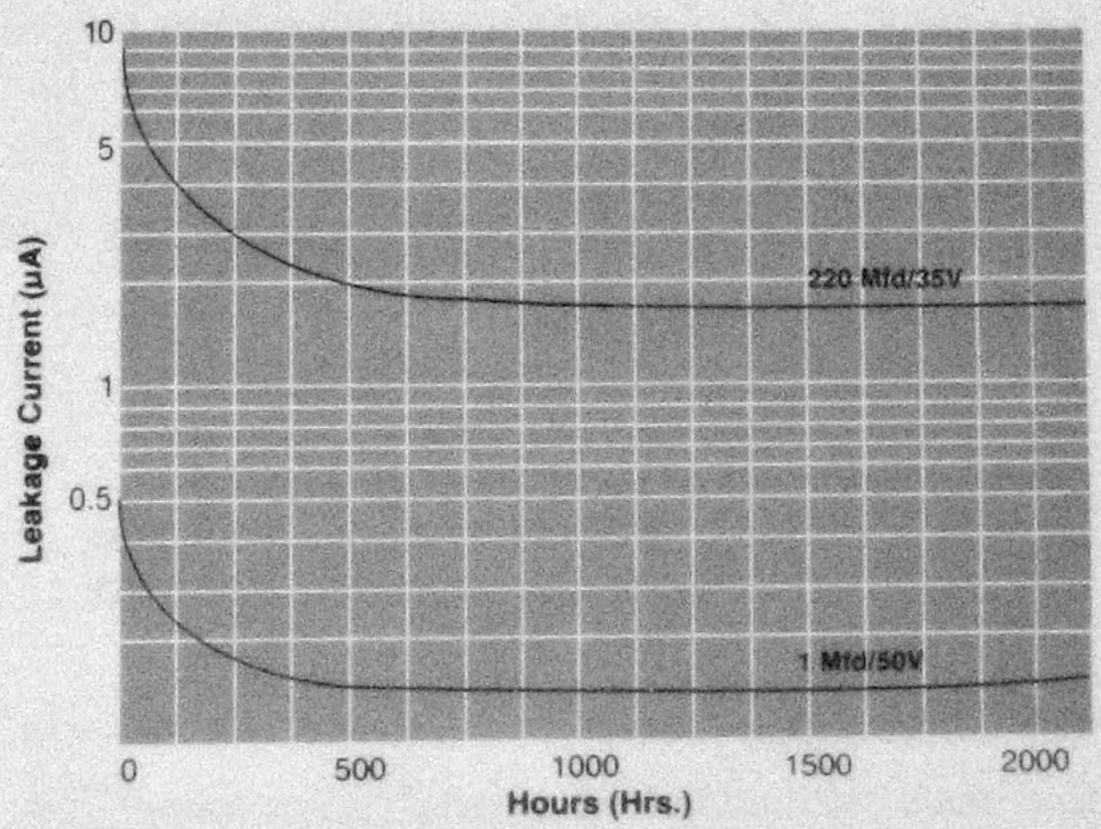

Note: These graphs reflect typical measurements

MECHANICAL SPECIFICATIONS

13.0 CONSTRUCTION

Electrodes:	Highest purity Aluminum.
Separation:	Porous paper impregnated with a high stability electrolyte.
Termination:	Welded for high mechanical and electrical strength.
Case:	Extruded Aluminum can.
Windings:	Low inductance. Hermetically sealed within the case.
Seals:	Highest quality rubber, or rubber phenolic end seals. Vented safety end seals on selected sizes.
Optional:	Solvent Tolerant elastomer end seals are available on request Epoxy end seals are available on request (type RSM-PX).

14.0 INSULATING SLEEVE

Standard Sleeve:	Polyvinyl Chloride (PVC).
Optional Material:	MYLAR® or Polyester.
Insulation Resistance:	≥ 50 Megohms @ 100WVDC.
Dielectric Strength:	1.5kV for 30 seconds with no breakdown.

15.0 MARKINGS

Location: On Sleeve or Aluminum can.

⅊ or ILLINOIS.	Date Code
Capacitance (Mfd.).	+ 85 °C
Working Voltage (WVDC).	RSM
Location of cathode lead wire.	EIA No. 145

16.0 SHOCK & VIBRATION

⅊ type RSM capacitors meet requirements of MIL STD 202D method 204B Part A: 10g or O-50Hz maximum total of 9 hours with no serious external or internal damage. After test, electrical performance will be within standard + 25 °C specifications.

17.0 CONTAINER SEALS

End seals are made of the highest quality rubber, rubber phenolic or Solvent Tolerant elastomer.

Solvent Tolerant elastomer end seals are available

Epoxy end seals are available (type RSM-PX).

18.0 SAFETY VENTING

Vented safety end seals are supplied on selected case sizes. Note! Case Vent is on all parts with Diameter $\geq \frac{.315}{8.0}$

19.0 SOLDERABILITY

⅊ type RSM capacitors meet the solderability requirements of MIL STD 202D, method 208B. Flow soldering can be used when the above temperature-time considerations are observed. Follow limits outlined in EIA RS395 par. 2.1.4.

20.0 CLEANING AGENTS

Note: Use of Halogenated Hydrocarbon cleaning solvents can contaminate aluminum electrolytic capacitors without proper barrier protection.

Solvents normally considered safe:*

Methyl Alcohol	Xylene
Ethyl Alcohol	Alconox (Water Sol.)
Propyl Alcohol	Butyl Alcohol

Epoxy and/or Solvent Tolerant Elastomer End Seals are available on all type RSM capacitors. These end seals are recommended for use with the following halogenated solvents with a maximum exposure period of five minutes.

Acceptable Solvents:

Freon® TE	Freon® TS
Freon® TMS	

Cleaning Systems:

Vapor Immersion Ultrasonic

Please contact ⅊ concerning specific use of any halogenated hydrocarbon or other type of cleaning solvent.

21.0 LEAD PULL & BEND TEST

Lead Pull Test:	3lbs axially for 10 seconds (MIL STD 202D method 211A part A)
Lead Bend Test	1lb. for one cycle (MIL STD 202D method 211A part C)

22.0 TAPE & REEL CONFIGURATIONS

⅊ type RSM capacitors are available on tape or reel for use with automatic insertion equipment.

23.0 STANDARD TEST METHODS

E.I.A. RS154B	J.I.S.-C-5141
E.I.A. RS178B	MIL-C-62
E.I.A. RS468	MIL-202D (shock & vibration)
E.I.A. RS395	International Electronic Standards

*No guarantees or warranties are expressed or implied with the use of any solvents. Chlorinated solvents will swell PVC sleeving and may result in cracking after exposure.

ALUMINUM ELECTROLYTIC CAPACITORS
Subminiature • Radial Lead

RSM

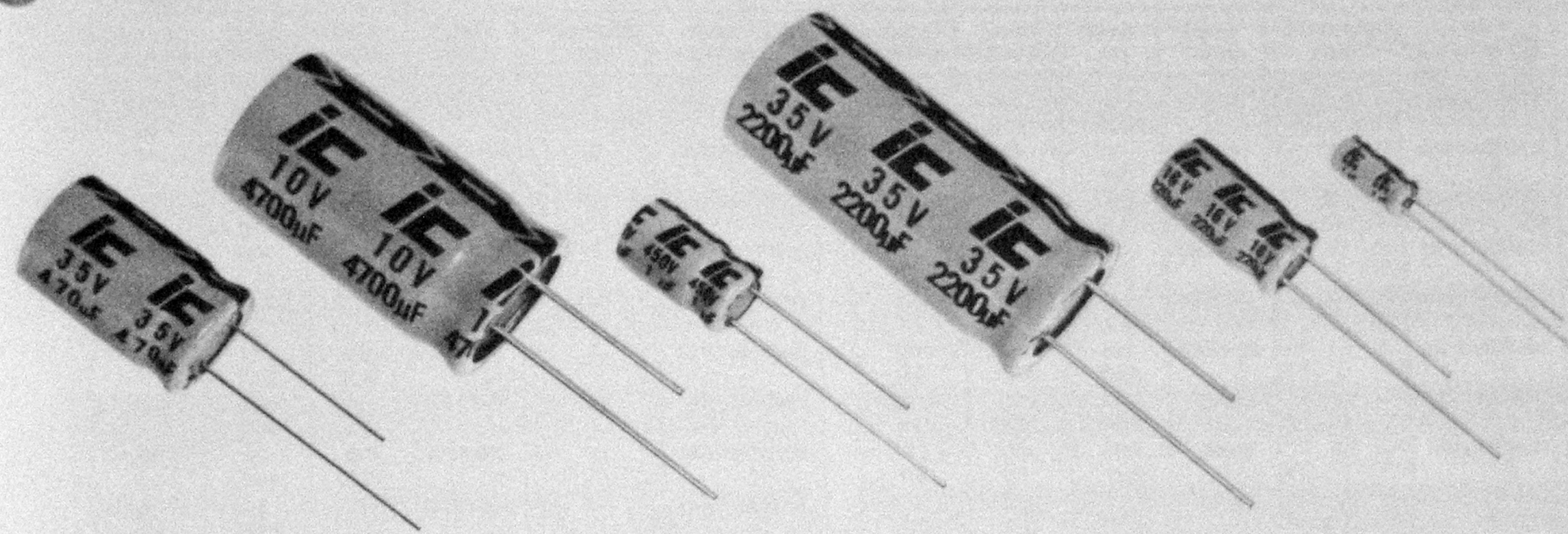

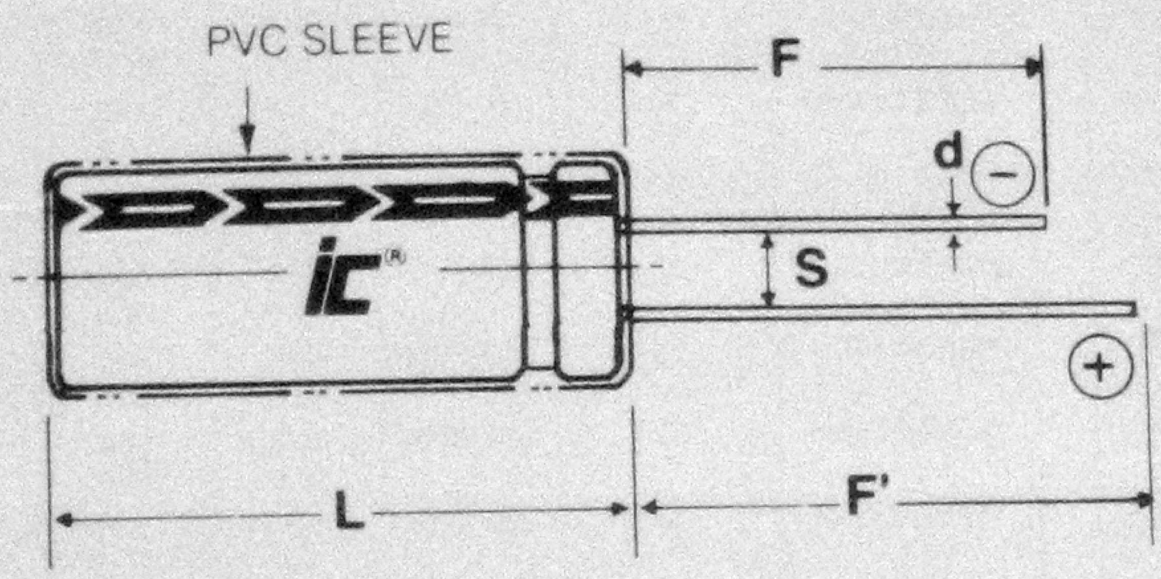

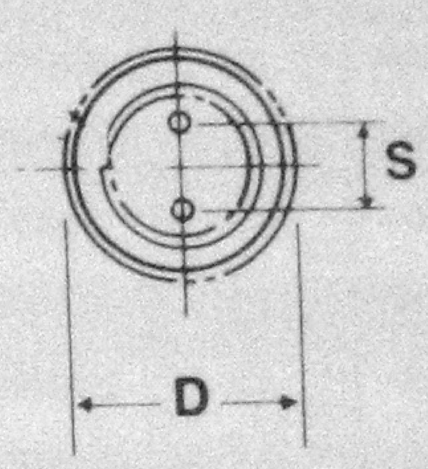

*Note: Vent is on all parts with diameter $\geq \frac{.315 \text{ in.}}{8.0 \text{ mm}}$

RSM LEAD INFORMATION vs. CASE SIZE (inches / mm)

Case Diameter (D)	.197 / 5.0	.248 / 6.3	.315 / 8.0	.394 / 10.0	.492 / 12.5	.630 / 16.0	.709 / 18.0
Lead Spacing (S)	.079 / 2.0	.098 / 2.5	.138 / 3.5	.197 / 5.0	.197 / 5.0	.295 / 7.5	.295 / 7.5
Lead Thickness (d)	.020 / .5	.020 / .5	.024 / .6	.024 / .6	.024 / .6	.032 / .8	.032 / .8
Wire Gauge (AWG)	24	24	22	22	22	20	20

CASE TOLERANCE (inches / mm)

Case Diameter (D)	Tolerance Case Diameter (D)	Case Length (L)	Tolerance Case Length (L)
$\leq \frac{.394}{10.0}$	$\leq \frac{\pm .020}{\pm 0.5}$	$\leq \frac{.492}{12.5}$	$\leq \frac{+.059}{+1.5}$
$\geq \frac{.492}{12.5}$	$\leq \frac{+.020}{+0.5}$	$\geq \frac{.630}{16.0}$	$\leq \frac{+.078}{+2.0}$

LEAD LENGTH (inches / mm.)

Cathode Lead Length (F)	Anode Lead Length (F')	Lead Spacing Tolerance (S)
$\frac{.591}{15.0}$ MIN.	$\frac{.787}{20.0}$ MIN.	$\frac{\pm .02}{\pm 0.5}$

Note 1: Dimensions shown do not include sleeve thickness

Note 2: Case Vent is standard on all diameters $\geq \frac{.315 \text{ in.}}{8.0 \text{mm}}$

ALUMINUM ELECTROLYTIC CAPACITORS
Subminiature • Radial Lead

RSM

STANDARD PART LISTING

inches/mm.

ic PART NUMBER	CAPACITY MFD.	WVDC (SVDC)	CASE DIA.	CASE LENGTH	LEAD SPACING
474RSM050M	0.47	50(63)	.197 5.0	.433 11.0	.079 2.0
474RSM100M	0.47	100(125)	.197 5.0	.433 11.0	.079 2.0
105RSM050M	1.0	50(63)	.197 5.0	.433 11.0	.079 2.0
105RSM100M	1.0	100(125)	.197 5.0	.433 11.0	.079 2.0
105RSM160M	1.0	160(200)	.248 6.3	.433 11.0	.098 2.5
105RSM250M	1.0	250(300)	.394 10.0	.630 16.0	.197 5.0
105RSM450M	1.0	450(500)	.394 10.0	.630 16.0	.197 5.0
155RSM050M	1.5	50(63)	.197 5.0	.433 11.0	.079 2.0
225RSM050M	2.2	50(63)	.197 5.0	.433 11.0	.079 2.0
225RSM100M	2.2	100(125)	.197 5.0	.433 11.0	.079 2.0
225RSM160M	2.2	160(200)	.315 8.0	.453 11.5	.138 3.5
225RSM350M	2.2	350(400)	.394 10.0	.630 16.0	.197 5.0
225RSM450M	2.2	450(500)	.394 10.0	.787 20.0	.197 5.0
335RSM050M	3.3	50(63)	.197 5.0	.433 11.0	.079 2.0
335RSM100M	3.3	100(125)	.197 5.0	.433 11.0	.079 2.0
335RSM250M	3.3	250(300)	.394 10.0	.630 16.0	.197 5.0
335RSM350M	3.3	350(400)	.394 10.0	.787 20.0	.197 5.0
335RSM450M	3.3	450(500)	.492 12.5	.787 20.0	.197 5.0
475RSM050M	4.7	50(63)	.197 5.0	.433 11.0	.079 2.0
475RSM100M	4.7	100(125)	.248 6.3	.433 11.0	.098 2.5
475RSM250M	4.7	250(300)	.394 10.0	.630 16.0	.197 5.0
475RSM350M	4.7	350(400)	.394 10.0	.787 20.0	.197 5.0
475RSM450M	4.7	450(500)	.492 12.5	.984 25.0	.197 5.0
685RSM050M	6.8	50(63)	.197 5.0	.433 11.0	.079 2.0
685RSM100M	6.8	100(125)	.248 6.3	.433 11.0	.098 2.5
106RSM035M	10	35(44)	.197 5.0	.433 11.0	.079 2.0
106RSM050M	10	50(63)	.197 5.0	.433 11.0	.079 2.0
106RSM063M	10	63(79)	.248 6.3	.433 11.0	.098 2.5
106RSM100M	10	100(125)	.315 8.0	.453 11.5	.138 3.5
106RSM160M	10	160(200)	.394 10.0	.630 16.0	.197 5.0
106RSM250M	10	250(300)	.492 12.5	.787 20.0	.197 5.0
106RSM350M	10	350(400)	.492 12.5	.984 25.0	.197 5.0
106RSM450M	10	450(500)	.630 16.0	.984 25.0	.295 7.5
156RSM035M	15	35(44)	.197 5.0	.433 11.0	.079 2.0
156RSM050M	15	50(63)	.248 6.3	.433 11.0	.098 2.5
156RSM100M	15	100(125)	.315 8.0	.453 11.5	.138 3.5

ic PART NUMBER	CAPACITY MFD.	WVDC (SVDC)	CASE DIA.	CASE LENGTH	LEAD SPACING
226RSM025M	22	25(32)	.197 5.0	.433 11.0	.079 2.0
226RSM035M	22	35(44)	.248 6.3	.433 11.0	.098 2.5
226RSM050M	22	50(63)	.248 6.3	.433 11.0	.098 2.5
226RSM063M	22	63(79)	.315 8.0	.453 11.5	.138 3.5
226RSM100M	22	100(125)	.394 10.0	.492 12.5	.197 5.0
226RSM160M	22	160(200)	.492 12.5	.787 20.0	.197 5.0
226RSM250M	22	250(300)	.492 12.5	.984 25.0	.197 5.0
226RSM350M	22	350(400)	.630 16.0	.984 25.0	.295 7.5
226RSM450M	22	450(500)	.630 16.0	1.398 35.5	.295 7.5
336RSM016M	33	16(20)	.197 5.0	.433 11.0	.079 2.0
336RSM035M	33	35(44)	.248 6.3	.433 11.0	.098 2.5
336RSM050M	33	50(63)	.315 8.0	.453 11.5	.138 3.5
336RSM063M	33	63(79)	.315 8.0	.453 11.5	.138 3.5
336RSM100M	33	100(125)	.394 10.0	.630 16.0	.197 5.0
336RSM160M	33	160(200)	.492 12.5	.984 25.0	.197 5.0
336RSM250M	33	250(300)	.630 16.0	.984 25.0	.295 7.5
336RSM350M	33	350(400)	.630 16.0	1.398 35.5	.295 7.5
476RSM010M	47	10(13)	.197 5.0	.433 11.0	.079 2.0
476RSM025M	47	25(32)	.248 6.3	.433 11.0	.098 2.5
476RSM050M	47	50(63)	.315 8.0	.453 11.5	.138 3.5
476RSM063M	47	63(79)	.394 10.0	.492 12.5	.197 5.0
476RSM080M	47	80(100)	.394 10.0	.630 16.0	.197 5.0
476RSM100M	47	100(125)	.394 10.0	.787 20.0	.197 5.0
476RSM160M	47	160(200)	.630 16.0	.984 25.0	.295 7.5
476RSM250M	47	250(300)	.630 16.0	1.240 31.5	.295 7.5
686RSM016M	68	16(20)	.248 6.3	.433 11.0	.098 2.5
686RSM035M	68	35(44)	.315 8.0	.453 11.5	.138 3.5
686RSM050M	68	50(63)	.394 10.0	.492 12.5	.197 5.0
686RSM100M	68	100(125)	.394 10.0	.787 20.0	.197 5.0
107RSM010M	100	10(13)	.248 6.3	.433 11.0	.098 2.5
107RSM025M	100	25(32)	.315 8.0	.453 11.5	.138 3.5
107RSM035M	100	35(44)	.394 10.0	.492 12.5	.197 5.0
107RSM050M	100	50(63)	.394 10.0	.630 16.0	.197 5.0

ALUMINUM ELECTROLYTIC CAPACITORS
Subminiature • Radial Lead

RSM

STANDARD PART LISTING

inches/mm.

iC PART NUMBER	CAPACITY MFD.	WVDC (SVDC)	CASE DIA.	CASE LENGTH	LEAD SPACING
107RSM063M	100	63(79)	.394 10.0	.787 20.0	.197 5.0
107RSM100M	100	100(125)	.492 12.5	.787 20.0	.197 5.0
107RSM160M	100	160(200)	.630 16.0	1.398 35.5	.295 7.5
107RSM250M	100	250(300)	.709 18.0	1.575 40.0	.295 7.5
157RSM016M	150	16(20)	.315 8.0	.453 11.5	.138 3.5
157RSM025M	150	25(32)	.394 10.0	.492 12.5	.197 5.0
157RSM035M	150	35(44)	.394 10.0	.630 16.0	.197 5.0
157RSM050M	150	50(63)	.394 10.0	.787 20.0	.197 5.0
157RSM080M	150	80(100)	.492 12.5	.787 20.0	.197 5.0
157RSM100M	150	100(125)	.492 12.5	.984 25.0	.197 5.0
227RSM010M	220	10(13)	.315 8.0	.453 11.5	.138 3.5
227RSM016M	220	16(20)	.394 10.0	.492 12.5	.197 5.0
227RSM025M	220	25(32)	.394 10.0	.630 16.0	.197 5.0
227RSM035M	220	35(44)	.394 10.0	.787 20.0	.197 5.0
227RSM050M	220	50(63)	.492 12.5	.787 20.0	.197 5.0
227RSM063M	220	63(79)	.492 12.5	.787 20.0	.197 5.0
227RSM080M	220	80(100)	.492 12.5	.984 25.0	.197 5.0
227RSM100M	220	100(125)	.630 16.0	.984 25.0	.295 7.5
337RSM010M	330	10(13)	.394 10.0	.492 12.5	.197 5.0
337RSM016M	330	16(20)	.394 10.0	.630 16.0	.197 5.0
337RSM025M	330	25(32)	.394 10.0	.787 20.0	.197 5.0
337RSM035M	330	35(44)	.492 12.5	.787 20.0	.197 5.0
337RSM050M	330	50(63)	.492 12.5	.787 20.0	.197 5.0
337RSM063M	330	63(79)	.492 12.5	.984 25.0	.197 5.0
337RSM080M	330	80(100)	.630 16.0	1.240 31.5	.295 7.5
337RSM100M	330	100(125)	.630 16.0	1.240 31.5	.295 7.5
477RSM6R3M	470	6.3(8)	.394 10.0	.492 12.5	.197 5.0
477RSM010M	470	10(13)	.394 10.0	.630 16.0	.197 5.0
477RSM016M	470	16(20)	.394 10.0	.787 20.0	.197 5.0
477RSM025M	470	25(32)	.492 12.5	.787 20.0	.197 5.0
477RSM035M	470	35(44)	.492 12.5	.984 25.0	.197 5.0
477RSM050M	470	50(63)	.630 16.0	.984 25.0	.295 7.5
477RSM063M	470	63(79)	.630 16.0	.984 25.0	.295 7.5
477RSM080M	470	80(100)	.630 16.0	1.398 35.5	.295 7.5
477RSM100M	470	100(125)	.709 18.0	1.398 35.5	.295 7.5

iC PART NUMBER	CAPACITY MFD.	WVDC (SVDC)	CASE DIA.	CASE LENGTH	LEAD SPACING
687RSM6R3M	680	6.3(8)	.394 10.0	.630 16.0	.197 5.0
687RSM010M	680	10(13)	.394 10.0	.787 20.0	.197 5.0
687RSM016M	680	16(20)	.492 12.5	.787 20.0	.197 5.0
687RSM025M	680	25(32)	.492 12.5	.984 25.0	.197 5.0
687RSM035M	680	35(44)	.630 16.0	.984 25.0	.295 7.5
687RSM050M	680	50(63)	.630 16.0	.984 25.0	.295 7.5
687RSM063M	680	63(79)	.630 16.0	1.240 31.5	.295 7.5
687RSM080M	680	80(100)	.709 18.0	1.398 35.5	.295 7.5
108RSM6R3M	1,000	6.3(8)	.394 10.0	.787 20.0	.197 5.0
108RSM010M	1,000	10(13)	.492 12.5	.787 20.0	.197 5.0
108RSM016M	1,000	16(20)	.492 12.5	.984 25.0	.197 5.0
108RSM025M	1,000	25(32)	.630 16.0	.984 25.0	.295 7.5
108RSM035M	1,000	35(44)	.630 16.0	.984 25.0	.295 7.5
108RSM050M	1,000	50(63)	.630 16.0	1.240 31.5	.295 7.5
108RSM063M	1,000	63(79)	.709 18.0	1.398 35.5	.295 7.5
158RSM010M	1,500	10(13)	.492 12.5	.984 25.0	.197 5.0
158RSM016M	1,500	16(20)	.630 16.0	.984 25.0	.295 7.5
158RSM025M	1,500	25(32)	.630 16.0	1.240 31.5	.295 7.5
158RSM035M	1,500	35(44)	.630 16.0	1.398 35.5	.295 7.5
158RSM050M	1,500	50(63)	.709 18.0	1.575 40.0	.295 7.5
228RSM6R3M	2,200	6.3(8)	.492 12.5	.984 25.0	.197 5.0
228RSM010M	2,200	10(13)	.630 16.0	.984 25.0	.295 7.5
228RSM016M	2,200	16(20)	.630 16.0	.984 25.0	.295 7.5
228RSM025M	2,200	25(32)	.630 16.0	1.398 35.5	.295 7.5
228RSM035M	2,200	35(44)	.709 18.0	1.398 35.5	.295 7.5
338RSM6R3M	3,300	6.3(8)	.630 16.0	.984 25.0	.295 7.5
338RSM010M	3,300	10(13)	.630 16.0	1.240 31.5	.295 7.5
338RSM016M	3,300	16(20)	.630 16.0	1.398 35.5	.295 7.5
338RSM025M	3,300	25(32)	.709 18.0	1.575 40.0	.295 7.5
478RSM6R3M	4,700	6.3(8)	.630 16.0	1.240 31.5	.295 7.5
478RSM010M	4,700	10(13)	.630 16.0	1.398 35.5	.295 7.5
478RSM016M	4,700	16(20)	.709 18.0	1.398 35.5	.295 7.5
688RSM6R3M	6,800	6.3(8)	.630 16.0	1.398 35.5	.295 7.5
688RSM010M	6,800	10(13)	.709 18.0	1.575 40.0	.295 7.5
109RSM6R3M	10,000	6.3(8)	.709 18.0	1.575 40.0	.295 7.5

NOTE: WVDC: Rated DC Working Voltage @ +85°C
SVDC: Maximum DC Surge Voltage @ +85°C