USB 2.0 Standard Connectors

UX Series

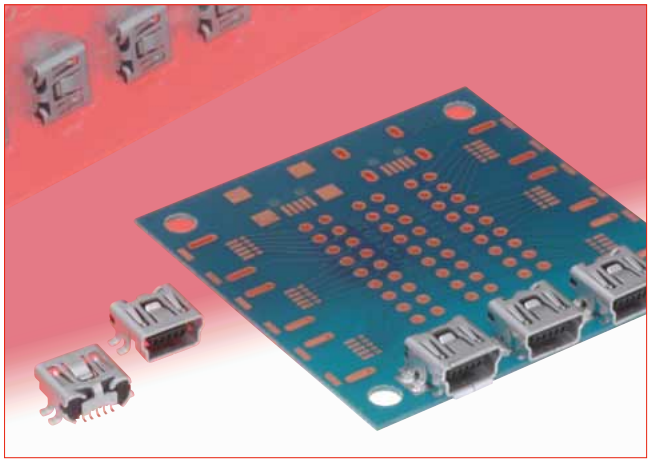

Meets requirements of USB 2.0 Standard
USB 2.0 certified

■Features

1. Compatible to USB 2.0 Standard

The UX series connectors are certified by a certification organization specified by the USB Association.
The connectors are able to meet high-speed transmissions up to 480 Mbps, delivering optimal PC peripheral connections.

2. Low skew structure

An equal electrical length design between twisted pairs (contact numbers 2 and 3) for both the receptacles and the plugs provides for a theoretical zero skew. (Fig.1)

3. No heat-shrink tube needed

The wire termination section of the plug is fixed on the mold. In addition Hirose's unique metal shield structure allows the over-mold resin to easily flow into the wire termination section preventing short circuits from occurring even without using heat shrink tubing. This feature allows shortening of the length of untwisted part resulting in impedance unmatching at the wire termination sections.

4. Easy to handle plug

The plug is a snap lock type that gives a clear tactile click, assuring secure connector mating.The over-mold section also has a thin structure for space saving.

5. Metal shield for SMT or DIP mounting

Metal shields with either SMT or solder dip type are available to match the PCB design.

6. With or without positioning boss

Versions with or without positioning bosses can be selected to match the PCB design.

7. Suitable for automatic mounting

A heat resistant tape for vacuum pickup is applied to the receptacle allowing for the use of automatic mounting machines. Receptacles without tape are also available.

8. RoHS compliant

All materials and substances used to produce this product comply with RoHS standards.

Equal electrical length design(between twisted pairs)

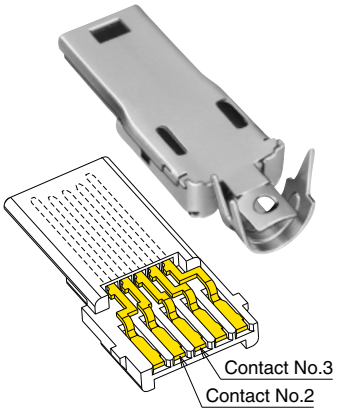

Fig.1

Ideal for the connection of personal computer peripherals

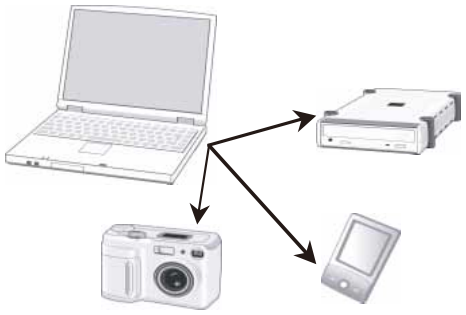

Fig.2

Jun.1.2026 Copyright 2026 HIROSE ELECTRIC CO., LTD. All Rights Reserved.

■Product Specifications

Ratings	Voltage rating	30V AC	Operating temperature range	-30 to +75℃ (Note1)
	Current rating	1A		

Item	Specification	Conditions
1.Contact resistance	50mΩ max.	100mA
2.Insulation resistance	100MΩ min.	100V DC
3.Withstanding voltage	No flashover or insulation breakdown	100V AC / 1 minute
4.Capacitance	2pF max.	Measure between adjacent contacts at 1,000 ±10Hz
5.Total insertion/ withdrawal force	Insertion force : 35N max. Withdrawal force : 7N min.	Measure with an applicable connector.
6.Durability (mating/unmating)	With corresponding HRS connector. Contact resistance : 70mΩ max. Withdrawal force : 3N min.	5,000 cycles
7.Vibration	No electrical discontinuity of 1μs or longer No damage, cracks or parts dislocation.	Frequency 10 to 55Hz, single amplitude of 0.75mm, 2 hours in each of the 3 axial directions
8.Random vibration		Frequency 50 to 2,000Hz, 3 directions for 15 minutes each.
9.Shock		Acceleration of 490m/s², 11ms continuous time, sine half-wave, 3 cycles in each of the 6 directions
10.Heat Shock	Contact resistance : 70mΩ max.	Temperature : -55℃→ +20℃ to 35℃ → +85℃ → +20℃ to 35℃ Time : 30min. → 2 to 3 min. → 30 min.→ 2 to 3 minutes 10 cycles
11.Temperature cycle	Insulation resistance : 10MΩ min. (when dry)	7 cycles (168 hours) at -10 to 65℃ , humidity of 93 ± 3%
12.Salt spray	Contact resistance : 70mΩ max.	48 hours, 5% solution of salt water
13.Solderablity	Wet state, solder coverage area 95% min.	Solder temperature 245℃, immersion time 2 to 3 seconds

Note 1 : The term “storage” refers to connectors stored for a long period of time prior to mounting and use.

■Materials / Finish

●Receptacle

Part	Material	Finish	Remarks
Insulator	Synthetic resin	Color : Black	UL94V-0
Contacts	Copper alloy	Contact area : Gold plated Lead area : Gold plated	———
Metal shield	Copper alloy	Tin alloy plated	———
Tape for vacuum pickup	Polyamide	———	———

●Plug

Part	Material	Finish	Remarks
Insulator	Synthetic resin	Color : Black	UL94V-0
Contacts	Copper alloy	Contact : Gold plated Wiring side : Tin alloy plated	———
Metal shield	Steel	Tin alloy plated	———
Over-mold (Note1)	PVC resin (Note2)	Color : Black (Note3)	———

Note 1 : Single over-molded plug is not available as over-mold is created when forming the connector together with harness assembly.
Note 2 : Halogen-free material is also available.
Note 3 : Various colors are available for over-molds and cables. Contact our sales department for details.

Jun.1.2026 Copyright 2026 HIROSE ELECTRIC CO., LTD. All Rights Reserved.

■Product Number Structure

Refer to the chart below when determining the product specifications from the product number.
Please select from the product numbers listed in this catalog when placing orders.

●Receptacle

UX ❶ 60S ❷ C ❸ - MB ❹ - 5 ❺ S ❻ T ❼

●Plug

UX ❶ 40 ❷ A ❽ - MB ❹ - 5 ❺ P ❻

●Plug harness

UX ❶ 40 ❷ A ❽ - MB ❹ - 5 ❺ P ❻ A ❾ - 1000 ❿ - 1001 ⓫

❶ Series name	UX series
❷ Contact termination style	60S : SMT type 40 : Solder termination type
❸ Receptacle shape/type	C : Standard type
❹ Connector type	MB : Type Mini B
❺ Number of contacts	5 : 5 contacts
❻ Contact gender	S : Female P : Male
❼ Metal shield shape	T : SMT type 8 : Solder DIP type
❽ Plug serial symbol	A : Type for thick cable
❾ Type of connector on the opposite-side	A : Standard A
❿ Cable length	1000 : 1000mm(Note 1)
⓫ Additional type number	

Note 1 : Optional cable lengths of up to 3000mm are available.
Contact our sales department for details.

Jun.1.2026 Copyright 2026 HIROSE ELECTRIC CO., LTD. All Rights Reserved.

●Receptacle - Standard – Shell SMT

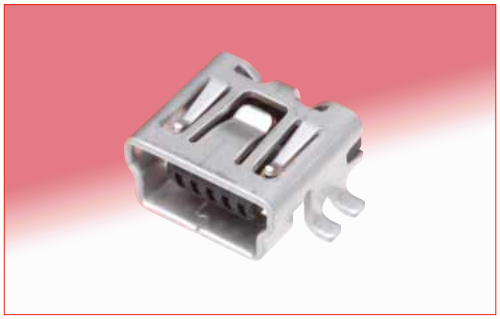

Part No.	HRS No.	RoHS
UX60SC-MB-5ST(80)	240-0016-6 80	○

Note 1 : Tape and reel packaging (1,500pcs/reel).
Order by number of reels.

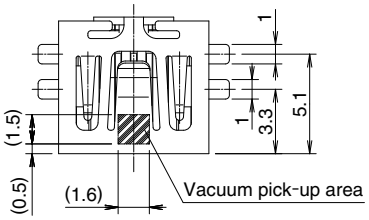

◆Recommended PCB mounting pattern

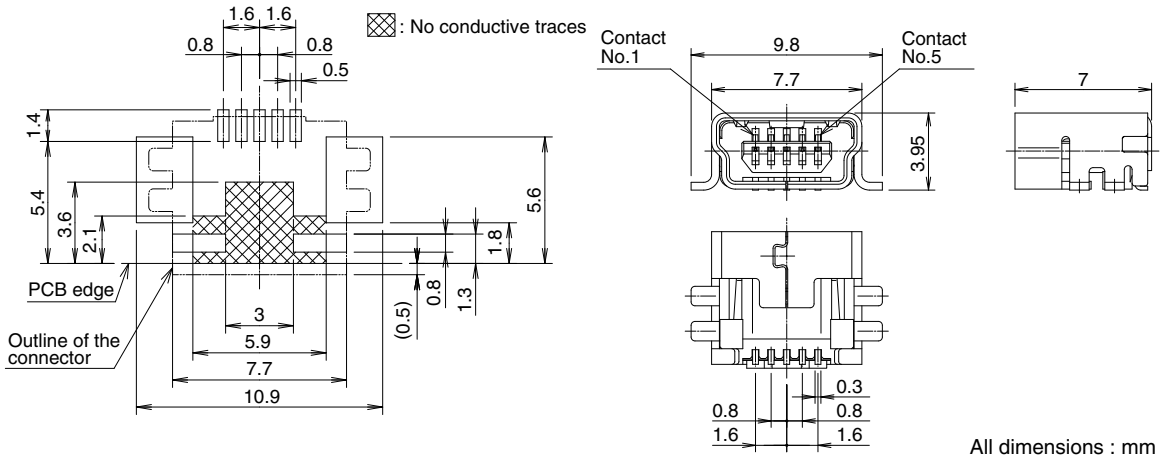

All dimensions : mm

●Receptacle - Standard - Shell through Hole

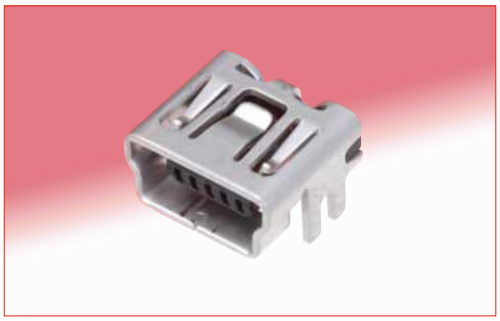

Part No.	HRS No.	RoHS
UX60SC-MB-5S8(80)	240-0020-3 80	○

Note 1 : Tape and reel packaging (1,000pcs/reel).
Order by number of reels.

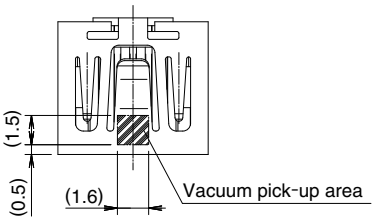

◆Recommended PCB mounting pattern

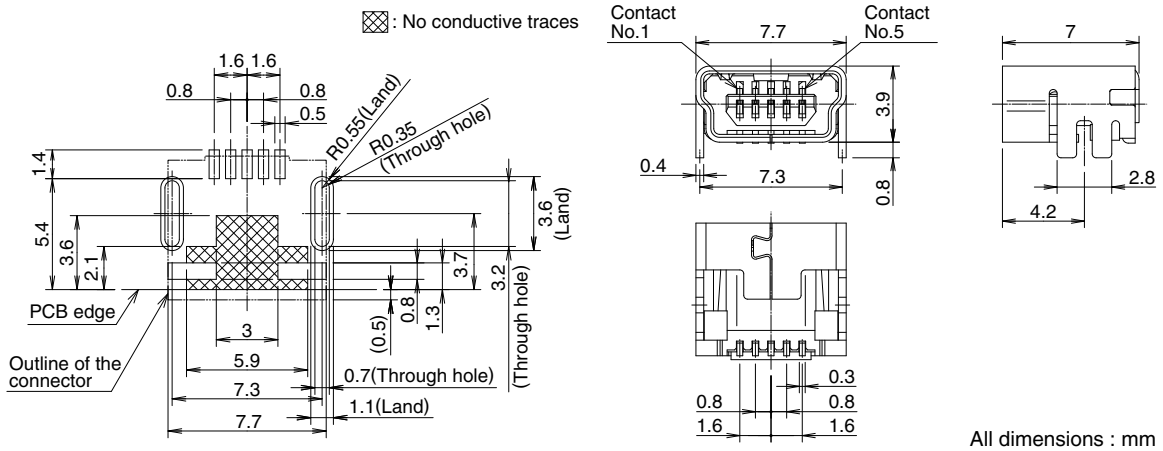

All dimensions : mm

Jun.1.2026 Copyright 2026 HIROSE ELECTRIC CO., LTD. All Rights Reserved.

■Plug

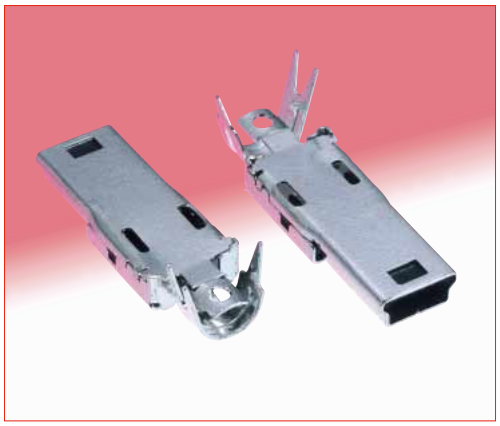

●Assembled state

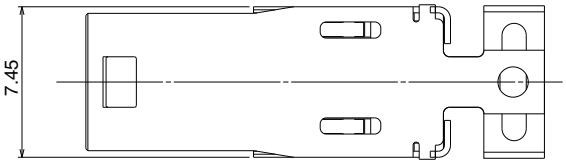

●Connector unit

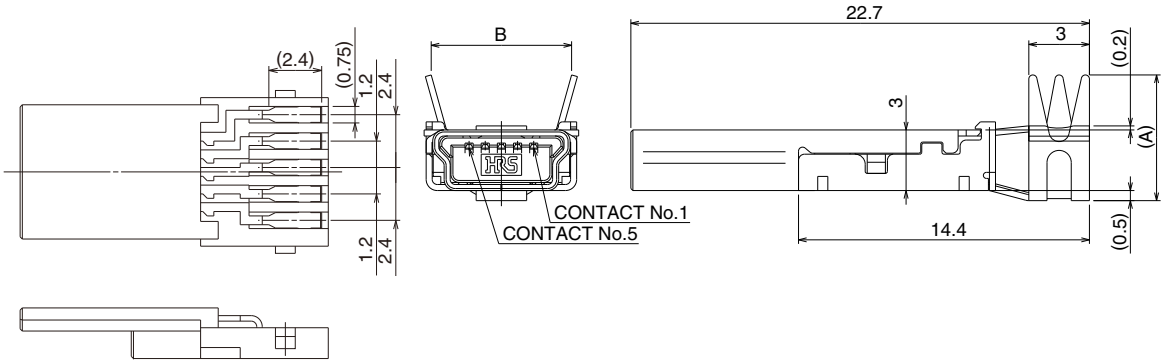

Part No.	HRS No.	Dimension A	Dimension B	Applicable cable(Note)	RoHS
UX40-MB-5P	240-0004-7	6.2	6.95	ϕ3.5～4.0	○
UX40A-MB-5P	240-0005-0	7.85	7.85	ϕ4.1～4.6	

(Note) The applicable cable diameters show approximate values (they may differ due to the insulation hardness).

■Plug Harness



Part No.	HRS No.	RoHS
UX40-MB-5PA-1000-2003	240-2003-5	○

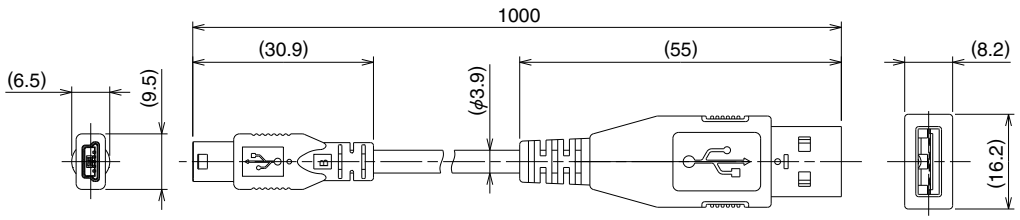

Jun.1.2026 Copyright 2026 HIROSE ELECTRIC CO., LTD. All Rights Reserved.

Recommended clearance areas

Dimensions shown in the illustrations below must be free of any materials or components, as this may interfere with the free movement of the ground contacts.

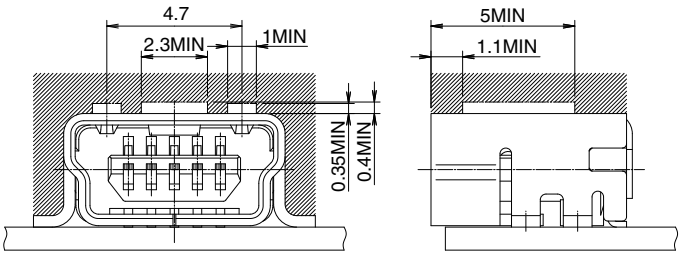

All dimensions: mm

Mated Assembly – Receptacle

●Shown for Reference

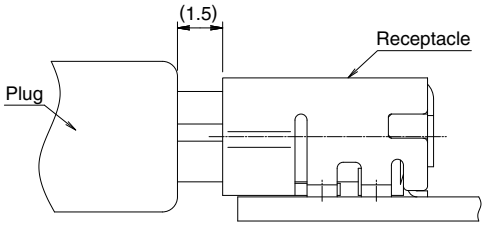

Packaging Specifications (JIS C 0806-3)

●Embossed carrier tape dimensions (The diagram represents a standard type)

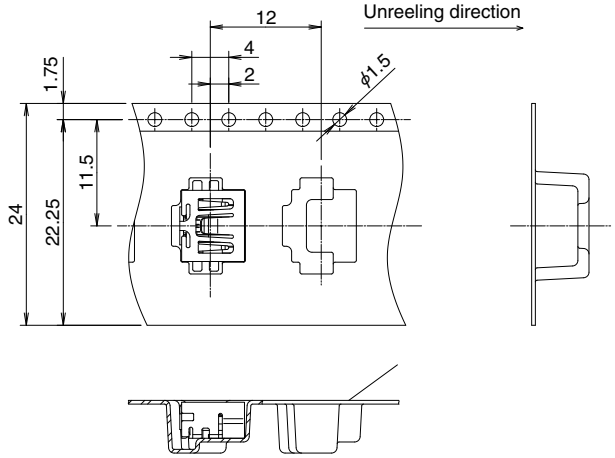

●Reel Dimensions

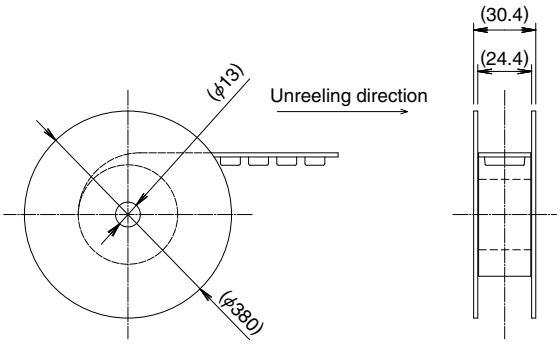

Recommended temperature profile

●Lead-free solder paste

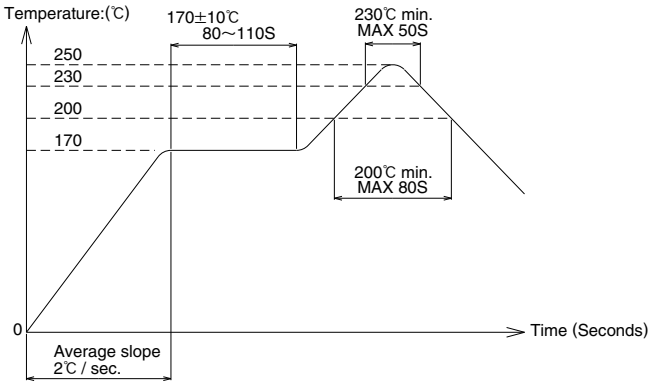

The temperature profile is based on the shown conditions. In individual applications the temperature may vary, depending on solder paste type, volume/ thickness and board size/thickness. Consult your solder paste and equipment manufacturer for specific recommendations.

Creative Links to World Electronics ®

HRS

HIROSE ELECTRIC CO.,LTD.
2-6-3,Nakagawa Chuoh,Tsuzuki-Ku,Yokohama-Shi 224-8540,JAPAN
TEL: +81-45-620-3526 Fax: +81-45-591-3726
http://www.hirose.com
http://www.hirose-connectors.com

Jun.1.2026 Copyright 2026 HIROSE ELECTRIC CO., LTD. All Rights Reserved.

The characteristics and the specifications contained herein are for reference purpose. Please refer to the latest customer drawings prior to use.
The contents of this catalog are current as of date of 12/2017. Contents are subject to change without notice for the purpose of improvements.