THIS DRAWING IS UNPUBLISHED. RELEASED FOR PUBLICATION -,- .
© COPYRIGHT - BY TYCO ELECTRONICS CORPORATION. ALL RIGHTS RESERVED.

LOC	DIST
G	86

REVISIONS

P	LTR	DESCRIPTION	DATE	DWN	APVD
	H1	REV PER ECR 06-010119	26APR06	JR	TM

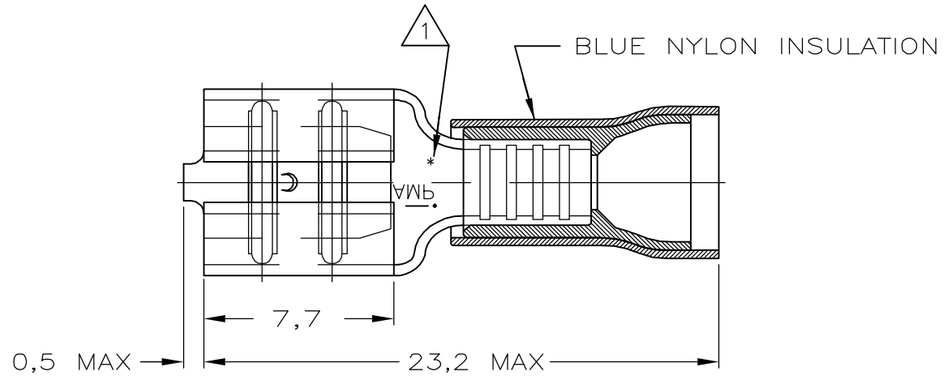

NOTES

1. ASTERISK * FOR PH.BRONZE VERSIONS ONLY.
2. WIRE RANGE: 1,0-2,6mm². INSUL. RANGE: 4,3mm MAX. DIA..
3. OBSOLETE WITHOUT REPLACEMENT

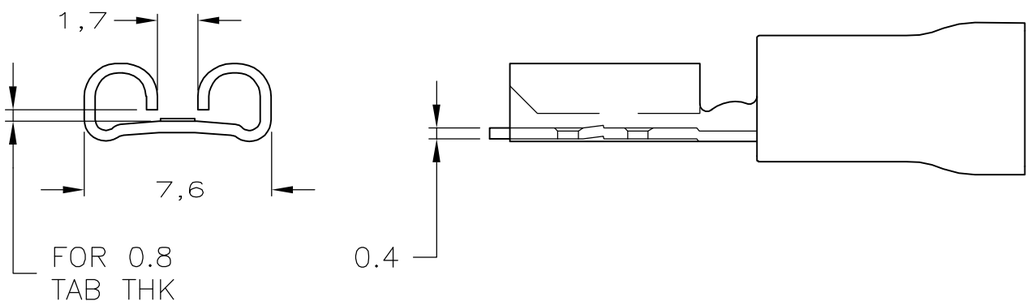

	FINISH	MATERIAL	PARTNUMBER
1	TAPE MOUNTED	~~9-160313-7~~ 3	~~5-160313-7~~ 3
1	TAPE MOUNTED	9-160313-6	~~5-160313-6~~ 3
1	TAPE MOUNTED	9-160313-5	5-160313-5
	TAPE MOUNTED	~~9-160313-4~~ 3	~~5-160313-4~~ 3
	TAPE MOUNTED	~~9-160313-3~~ 3	~~5-160313-3~~ 3
	TAPE MOUNTED	9-160313-2	5-160313-2
1	TIN-LEAD	PH.BRONZE	~~9-160313-8~~ 3
1	GOLDPLATED	PH.BRONZE	~~9-160313-7~~ 3
1	SILVERPLATED	PH.BRONZE	9-160313-6
1	TINPLATED	PH.BRONZE	9-160313-5
	GOLDPLATED	BRASS	~~9-160313-4~~ 3
	SILVERPLATED	BRASS	~~9-160313-3~~ 3
	TINPLATED	BRASS	9-160313-2

THIS DRAWING IS A CONTROLLED DOCUMENT.

DIMENSIONS: mm

TOLERANCES UNLESS OTHERWISE SPECIFIED:

0 PLC	± -
1 PLC	± -
2 PLC	± 0.38
3 PLC	± -
4 PLC	± -
ANGLES	± -

MATERIAL: -

FINISH: -

DWN JR RUTH 08OCT04
CHK T MICHIELUTTI 08OCT04
APVD T MICHIELUTTI 08OCT04
PRODUCT SPEC -
APPLICATION SPEC -
WEIGHT -

CUSTOMER DRAWING

tyco Electronics

Tyco Electronics Corporation
Harrisburg, Pa 17105-3608

NAME: .250 SRS P.I.D.G. FASTON REC. -

SIZE	CAGE CODE	DRAWING NO	RESTRICTED TO
A3	00779	C-160313	-

SCALE - SHEET 1 OF 1 REV H1