AMP-LATCH® Novo Receptacles with Recessed Covers

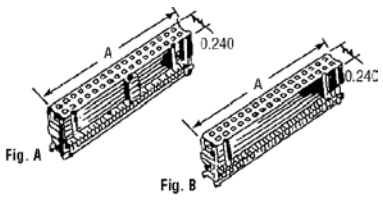

- .100" × .100" (2.54 mm × 2.54 mm) Centers
- Preassembled Receptacle
- Optional Strain Relief
- Black Thermoplastic, 94V-0 Rated
- Mates with Universal Pin Headers

Center and Military Polarized Receptacle — Fig. A

Stock No.	Mfr.'s Type	No. of Pos.	Overall Length A	Contact Plating	EACH 1-99	100-499	500-999
512-3500	746288-1	10	0.680	*	.88	.79	.66
512-3501	746288-2	14	0.880	*	1.16	1.05	.87
512-3502	746288-3	16	0.980	*	1.21	1.09	.91
512-3503	746288-4	20	1.180	*	1.27	1.15	.95
512-3504	746288-6	26	1.480	*	1.43	1.30	1.07
512-0164	746288-7	30	1.680	*	1.82	1.64	1.36
512-3505	746288-8	34	1.880	*	1.82	1.64	1.36
512-3506	746288-9	40	2.180	*	2.15	1.93	1.61
512-3507	1-746288-0	50	2.680	*	2.59	2.33	1.94
512-3508	1-746288-1	60	3.180	*	3.19	2.87	2.40
512-3509	1-746288-2	64	3.380	*	3.52	3.20	2.64

Military Polarized — Fig. B

512-3510	746290-1	10	0.680	*	.88	.79	.66
512-3511	746290-2	14	0.880	*	1.16	1.04	.87
512-3512	746290-3	16	0.980	*	1.21	1.09	.91
512-3513	746290-4	20	1.180	*	1.27	1.14	.95
512-3514	746290-6	26	1.480	*	1.43	1.29	1.07
512-3515	746290-8	34	1.880	*	1.82	1.66	1.36
512-3516	746290-9	40	2.180	*	2.15	1.93	1.61
512-3517	1-746290-0	50	2.680	*	2.59	2.35	1.94
512-3519	1-746290-2	64	3.380	*	3.52	3.20	2.64

***Contact Plating:** .000030 gold on post/pin mating end, .000100-.000200 bright tin-lead on termination end, with entire contact underplated .000050 nickel.

8

ECONOLATCH Receptacles with Recessed Covers

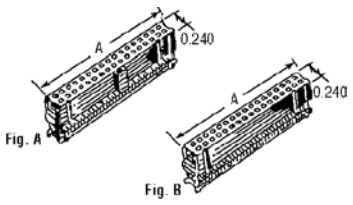

- 0.100" × 0.100" (2.54 mm × 2.54 mm) Centers
- Preloading Single Mating Beam Design
- Optional Strain Relief
- Universal Pin Headers

Center and Military Polarization Connector — Fig. A

Stock No.	Mfr.'s Type	No. of Pos.	Overall Length A	Contact Plating	EACH 1-99	100-499	500-999
512-8662	746285-1	10	0.68	*	.72	.64	.54
512-9067	746285-2	14	0.88	*	1.05	.94	.78
512-8623	746285-3	16	0.98	*	1.10	.99	.83
512-9153	746285-4	20	1.18	*	1.16	1.05	.87
512-8695	746285-6	26	1.48	*	1.43	1.30	1.07
512-9068	746285-8	34	1.88	*	1.60	1.44	1.20
512-9337	746285-9	40	2.18	*	1.76	1.59	1.32
512-8679	1-746285-0	50	2.68	*	2.15	1.95	1.61
512-9345	1-746285-1	60	3.18	*	4.28	3.90	3.21
512-9349	1-746285-2	64	3.38	*	3.03	2.76	2.27

Military Polarized — Fig. B

512-9353	499997-1	10	0.68	*	.72	.64	.54
512-9361	499997-3	16	0.98	*	1.10	.99	.90
512-8585	499997-4	20	1.18	*	1.16	1.04	.87
512-8770	499997-6	26	1.48	*	1.43	1.29	1.07
512-9365	499997-8	34	1.88	*	1.60	1.44	1.20
512-9367	499997-9	40	2.18	*	1.76	1.59	1.32
512-9369	1-499997-0	50	2.68	*	2.15	1.93	1.61
512-9375	1-499997-2	64	3.38	*	3.03	2.73	2.27

***Contact Plating:** Phosphor bronze duplex plated mating end, .000100 min. tin-lead on the termination end, with entire contact underplated .000050 nickel.

Universal Ejection Style Pin Headers

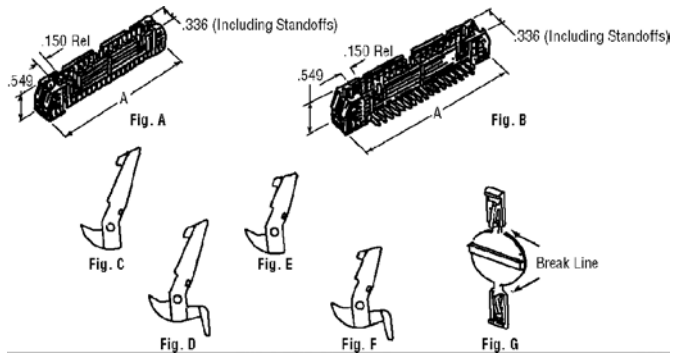

Military, Center and Dual Polarized; .100" × .100" Centers — Mate with Novo Receptacles — Terminate to PC Board

4 Sided Headers .240" (6.1 mm) Mating Post Length, Straight-Thru, .110" (2.79 mm) Termination Post Length — Fig. A

Stock No.	Mfr.'s Type	No. of Pos.	Finish*	EACH 1-99	100-499	500-999
512-3699	102153-1	10	A	.66	.59	.49
512-3531	102154-1	10	B	.72	.65	.54
512-3701	102153-2	14	A	.87	.78	.65
512-3532	102154-2	14	B	.93	.84	.70
512-3802	102153-3	16	A	.99	.89	.74
512-3533	102154-3	16	B	1.14	1.02	.85
512-3703	102153-4	20	A	1.23	1.11	.92
512-3534	102154-4	20	B	1.35	1.21	1.01
512-3804	102153-6	26	A	1.56	1.40	1.17
512-3535	102154-6	26	B	1.65	1.48	1.24
512-3705	102153-8	34	A	1.98	1.78	1.48
512-3536	102154-8	34	B	2.04	1.83	1.53
512-3806	102153-9	40	A	2.28	2.05	1.71
512-3537	102154-9	40	B	2.34	2.10	1.75
512-3707	1-102153-0	50	A	2.70	2.43	2.02
512-3538	1-102154-0	50	B	2.76	2.48	2.07
512-3539	1-102154-1	60	B	3.22	2.90	2.41
512-3808	1-102153-2	64	A	3.24	2.92	2.43

Right-Angle, .110" (2.79 mm) Termination Post Length — Fig. B

512-3725	102159-1	10	A	.72	.65	.54
512-3726	102159-3	16	A	1.14	1.02	.85
512-3544	102160-3	16	B	1.41	1.27	1.06
512-3727	102159-4	20	A	1.35	1.21	1.01
512-3545	102160-4	20	B	1.50	1.35	1.12
512-3728	102159-6	26	A	1.65	1.48	1.24
512-3546	102160-6	26	B	1.80	1.62	1.35
512-3729	102159-8	34	A	2.04	1.83	1.53
512-3547	102160-8	34	B	2.16	1.94	1.62
512-3730	102159-9	40	A	2.34	2.10	1.75
512-3548	102160-9	40	B	2.49	2.24	1.86
512-3731	1-102159-0	50	A	2.76	2.48	2.07
512-3549	1-102160-0	50	B	3.01	2.71	2.26
512-3550	1-102160-1	60	B	3.35	3.02	2.52

***Finish:** A — .000015 (0.00038) gold on post/pin mating end, .000100-.000200 (0.00254-0.00508) bright tin-lead on termination end, with entire contact underplated .000050 (0.00127) nickel; B — .000030 (0.00076) gold on post/pin mating end, .000100-.000200 (0.00254-0.00508) bright tin-lead on termination end, with entire contact underplated .000050 (0.00127) nickel.

Latches

Material: Black thermoplastic. UL94V-0 rated.

Stock No.	Mfr.'s Type	Fig.	Description	EACH 1-99	100-499	500-999
512-3735	102320-1	C	For mating receptacles with strain relief	.16	.15	.14
512-3736	102186-1	D	For mating receptacles with strain relief	.18	.16	.14
512-3737	102312-1	E	For mating receptacles without strain relief	.16	.15	.13
512-3738	102185-1	F	For mating receptacles without strain relief	.18	.16	.14

Polarization Key

512-3740	499991-2	G	2 keys per tab — sold per tab	.70	.64	.59

Strain Reliefs and Keying Plug for Novo and ECONOLATCH Receptacles

Strain Reliefs

Stock No.	Mfr.'s Type	No. of Pos.	Overall Length A	EACH 1-99	100-499	500-999
512-3520	499252-5	10	0.680	.13	.12	.10
512-3521	499252-9	14	0.880	.13	.12	.10
512-3522	499252-8	16	0.980	.13	.12	.10
512-3523	499252-2	20	1.180	.13	.12	.10
512-3524	499252-3	26	1.480	.16	.14	.12
512-3525	499252-6	34	1.880	.16	.14	.12
512-3526	499252-1	40	2.180	.19	.17	.14
512-3527	499252-4	50	2.680	.21	.19	.16
512-3528	499252-7	60	3.180	.24	.22	.18
512-3529	1-499252-3	64	3.380	.29	.27	.22

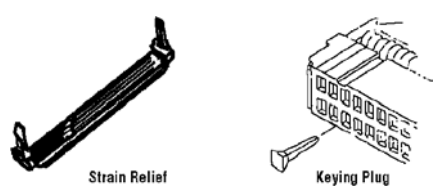

Keying Plug

512-3530. 499712-1. **1-99** ..... EACH .15
100-499 ..... EACH .12
500-999 ..... EACH .11