THIS DRAWING IS UNPUBLISHED. RELEASED FOR PUBLICATION -,- .
© COPYRIGHT - BY TYCO ELECTRONICS CORPORATION. ALL RIGHTS RESERVED.

LOC	DIST
AD	00

REVISIONS

P	LTR	DESCRIPTION	DATE	DWN	APVD
	Y	REV PER OG3C-0528-04	20DEC04	JR	JO

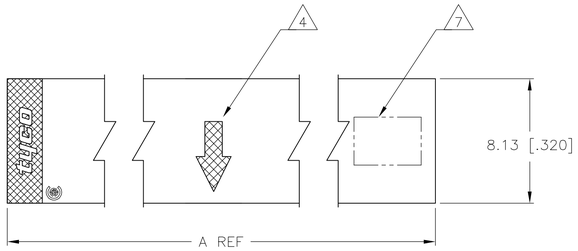

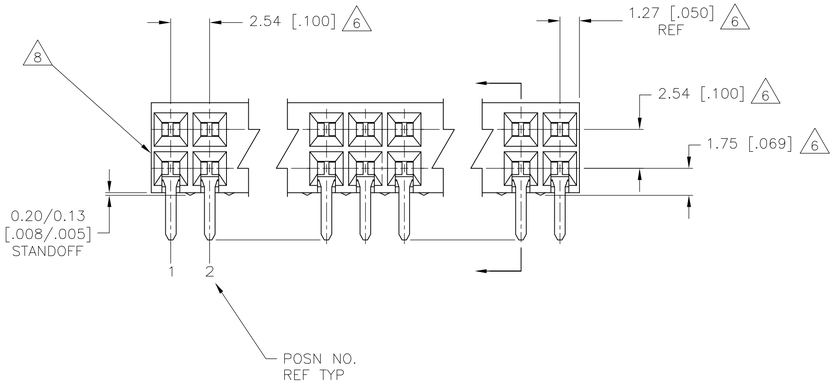

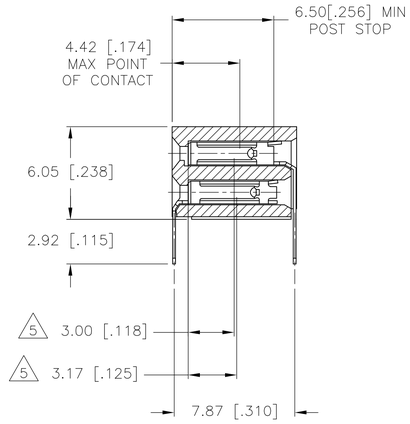

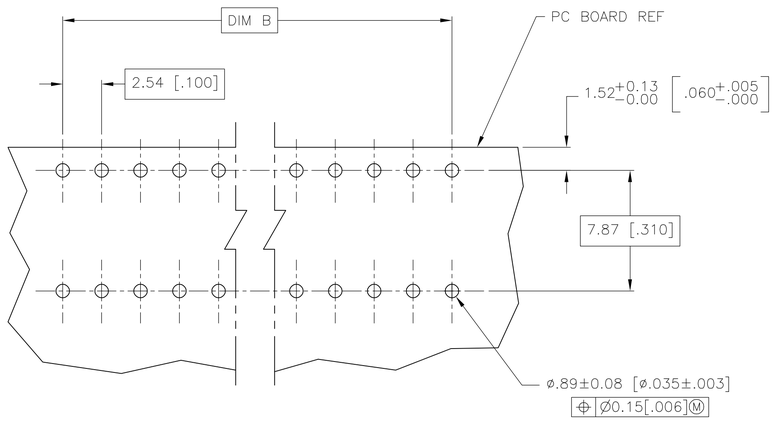

RECOMMENDED PC BOARD LAYOUT

B	A	NO. OF POSN	ASSEMBLY PART NUMBER
10.16[.400]	12.70[.500]	10	6-535512-4
7.62[.300]	10.16[.400]	8	6-535512-3
5.08[.200]	7.62[.300]	6	8 6-535512-2
2.54[.100]	5.08[.200]	4	8 6-535512-1
162.56[6.400]	165.10[6.500]	130	6-535512-0
160.02[6.300]	162.56[6.400]	128	5-535512-9
157.48[6.200]	160.02[6.300]	126	5-535512-8
152.40[6.000]	154.94[6.100]	122	5-535512-7
149.86[5.900]	152.40[6.000]	120	5-535512-6
147.32[5.800]	149.86[5.900]	118	5-535512-5
144.78[5.700]	147.32[5.800]	116	5-535512-4
142.24[5.600]	144.78[5.700]	114	5-535512-3
139.70[5.500]	142.24[5.600]	112	5-535512-2
137.16[5.400]	139.70[5.500]	110	5-535512-1
134.62[5.300]	137.16[5.400]	108	5-535512-0
132.08[5.200]	134.62[5.300]	106	4-535512-9
129.54[5.100]	132.08[5.200]	104	4-535512-8
127.00[5.000]	129.54[5.100]	102	4-535512-7
124.46[4.900]	127.00[5.000]	100	4-535512-6
121.92[4.800]	124.46[4.900]	98	4-535512-5
119.38[4.700]	121.92[4.800]	96	4-535512-4
116.84[4.600]	119.38[4.700]	94	4-535512-3
114.30[4.500]	116.84[4.600]	92	4-535512-2
111.76[4.400]	114.30[4.500]	90	4-535512-1
109.22[4.300]	111.76[4.400]	88	4-535512-0
106.68[4.200]	109.22[4.300]	86	3-535512-9
104.14[4.100]	106.68[4.200]	84	3-535512-8
101.16[4.000]	104.14[4.100]	82	3-535512-7
91.44[3.600]	93.98[3.700]	74	3-535512-6
88.90[3.500]	91.44[3.600]	72	3-535512-5
83.82[3.300]	86.36[3.400]	68	3-535512-4
81.28[3.200]	83.82[3.300]	66	3-535512-3
78.74[3.100]	81.28[3.200]	64	3-535512-2
76.20[3.000]	78.74[3.100]	62	3-535512-1
73.66[2.900]	76.20[3.000]	60	3-535512-0
71.12[2.800]	73.66[2.900]	58	2-535512-9
63.50[2.500]	66.04[2.600]	52	2-535512-8
55.88[2.200]	58.42[2.300]	46	2-535512-7
50.8[2.000]	53.34[2.100]	42	2-535512-6
48.26[1.900]	50.8[2.000]	40	2-535512-5
45.72[1.800]	48.26[1.900]	38	2-535512-4
38.10[1.500]	40.64[1.600]	32	2-535512-3
35.56[1.400]	38.10[1.500]	30	2-535512-2
33.02[1.300]	35.56[1.400]	28	2-535512-1
30.48[1.200]	33.02[1.300]	26	2-535512-0
25.40[1.000]	27.94[1.100]	22	1-535512-9
17.78[.700]	20.32[.800]	16	1-535512-8
15.24[.600]	17.78[.700]	14	1-535512-7
20.32[.800]	22.86[.900]	18	1-535512-6
58.42[2.300]	60.96[2.400]	48	1-535512-5
154.94[6.100]	157.48[6.200]	124	1-535512-4
99.06[3.900]	101.16[4.000]	80	1-535512-3
96.52[3.800]	99.06[3.900]	78	1-535512-2
93.98[3.700]	96.52[3.800]	76	1-535512-1
86.36[3.400]	88.90[3.500]	70	1-535512-0
68.58[2.700]	71.12[2.800]	56	535512-9
66.04[2.600]	68.58[2.700]	54	535512-8
60.96[2.400]	63.50[2.500]	50	535512-7
53.34[2.100]	55.88[2.200]	44	535512-6
43.18[1.700]	45.72[1.800]	36	535512-5
40.64[1.600]	43.18[1.700]	34	535512-4
27.94[1.100]	30.48[1.200]	24	535512-3
22.86[.900]	25.40[1.000]	20	535512-2
12.70[.500]	15.24[.600]	12	535512-1

1. HOUSING MATERIAL: GLASS FILLED POLYESTER, COLOR- BLACK
2. CONTACT MATERIAL: PHOSPHOR BRONZE
3. CONTACT FINISH: 0.00076[.000030] THK DUPLEX PLATED GOLD ON CONTACT AREA, 0.00127[.000050] MIN THK BRIGHT TIN-LEAD OR TIN ON SOLDERLEADS, ALL OVER 0.00127[.000050] NICKEL
4. MOLDED IN ARROW DESIGNATES THE MATING FACE OF THE CONNECTOR
5. POINT OF MEASUREMENT FOR PLATING THICKNESS OF CONTACT AREA
6. DIMENSIONS PERTAIN TO HOUSING CAVITY CENTERLINES
7. DATE CODE AND PART NUMBER MARKED IN APPROXIMATE LOCATION SHOWN.
8. ALTERNATE LOCATION FOR DATE CODE FOR 4 AND 6 POSITION.

THIS DRAWING IS A CONTROLLED DOCUMENT.

DIMENSIONS: MM

TOLERANCES UNLESS OTHERWISE SPECIFIED:
0 PLC ± -
1 PLC ± -
2 PLC ± -
3 PLC ± 0.13[.005]
4 PLC ± -
ANGLES ± -

MATERIAL 1 2
FINISH 3

DWN R BROWN 17MAY02
CHK J OLSON 17MAY02
APVD J OLSON 17MAY02

PRODUCT SPEC —
APPLICATION SPEC —
WEIGHT —

Tyco Electronics Corporation
Harrisburg, PA 17105

NAME: AMPMODU MOD II RECEPTACLE ASSEMBLY, HORIZONTAL, .100 CL, 2 ROW, CLOSED-ENTRY, SHORT POINT OF CONTACT, END-TO-END STACKABLE

SIZE	CAGE CODE	DRAWING NO	RESTRICTED TO
A1	00779	C-535512	—

CUSTOMER DRAWING | SCALE 5:1 | SHEET 1 OF 1 | REV Y