HC/49US (AT49) SMD LOW PROFILE CRYSTAL

ABLS

11.5 x 4.8 x 4.2 mm

Pb RoHS Compliant

FEATURES:

- Suitable for reflow
- Low in height - suitable for thin equipment
- Tight stability & extended temperature

APPLICATIONS:

- Computers, Modems, Microprocessors
- Automotive and Industrial
- Wireless Applications

STANDARD SPECIFICATIONS:

PARAMETERS	
ABRACON P/N	ABLS Series
Frequency	3.579545 MHz to 70 MHz
Operation Mode	AT cut (Fundamental or 3rd OT) or BT cut (See options) 3.579545MHz - 24.0MHz (Fundamental) (Standard) 24.01 - 70.00MHz (3rd- Overtone) (Standard) 24.01MHz - 50.00MHz (Fund. AT or BT) (Option. See 2.1)
Operating Temperature	0°C to + 70°C (see options)
Storage Temperature	- 55°C to + 125°C
Frequency Tolerance at +25°C	± 50 ppm max. (see options)
Frequency Stability over the Operating Temp. (Ref to +25°C)	± 50 ppm max. (see options)
Equivalent Series Resistance	See Table 1
Shunt Capacitance C_0	7pF max.
Load Capacitance C_L	18pF (see options)
Drive Level	1 mW max., 100µW typical
Aging at 25°C ± 3°C Per Year	± 5ppm max.
Insulation Resistance	500 MΩ min at 100Vdc ± 15V
Spurious Responses	-3dB max.
Drive level dependency (DLD)	from 1µW to 500µW (minimum 7 points tested)

TABLE 1: ESR

FREQUENCY (MHz)	ESR (Ω)
3.579 - 4.999 (Fund.)	180
5.000 - 5.999 (Fund.)	120
6.000 - 7.999 (Fund.)	100
8.000 - 8.999 (Fund.)	80
9.000 - 9.999 (Fund.)	60
10.000 - 15.999 (Fund.)	50
16.000 - 50.000 (Fund.)	40
24.01 - 31.999 (3rd O/T)	100
32.000 - 70.00 (3rd O/T)	80

- **Change in frequency (Maximum - Minimum) over DLD range < ±10ppm**
- **Change in ESR (Maximum - Minimum) over DLD range < 25% of Max ESR value**
- **Maximum ESR over DLD range < Max ESR value**

OPTIONS & PART IDENTIFICATION:

(Left blank if standard)

ABLS - Frequency - □ - R□□□- □ - □ - □ - □ - □

Frequency
XX.XXXX MHz

Load Capacitance
Please specify CL in pF or S for Series (minimun 10pF)

ESR
RXXX (Value in Ω)

Operating Temp.

A	-10°C to +60°C
B	-20°C to +70°C
C	-30°C to +70°C
N	-30°C to +85°C
D	-40°C to +85°C
J*	-40°C to +105°C
K*	-40°C to +125°C
L*	-55°C to +125°C

Freq. Tolerance

H5	± 5 ppm
1	± 10 ppm
7	± 15 ppm
2	± 20 ppm
3	± 25 ppm
4	± 30 ppm

Packaging
T for Tape and Reel

Mode
F for Fund. AT>24MHz
FB for Fund BT>24MHz

Freq. Stability

U**	± 10 ppm
G	± 15 ppm
X	± 20 ppm
W	± 25 ppm
Y	± 30 ppm
H	± 35 ppm
Q	± 100 ppm
R	± 150 ppm

NOTE: Fundamental BT frequency stability ± 100ppm max.at -10° C to +60° C only.
* Frequency stability ±50ppm, ±100ppm, ±150ppm only. Contact ABRACON for tighter frequency stability.
** -10 to +60C only.

30332 Esperanza, Rancho Santa Margarita, California 92688
tel 949-546-8000 | fax 949-546-8001 | www.abracon.com

HC/49US (AT49) SMD LOW PROFILE CRYSTAL

ABLS

11.5 x 4.8 x 4.2 mm

Pb RoHS Compliant

OUTLINE DRAWING:

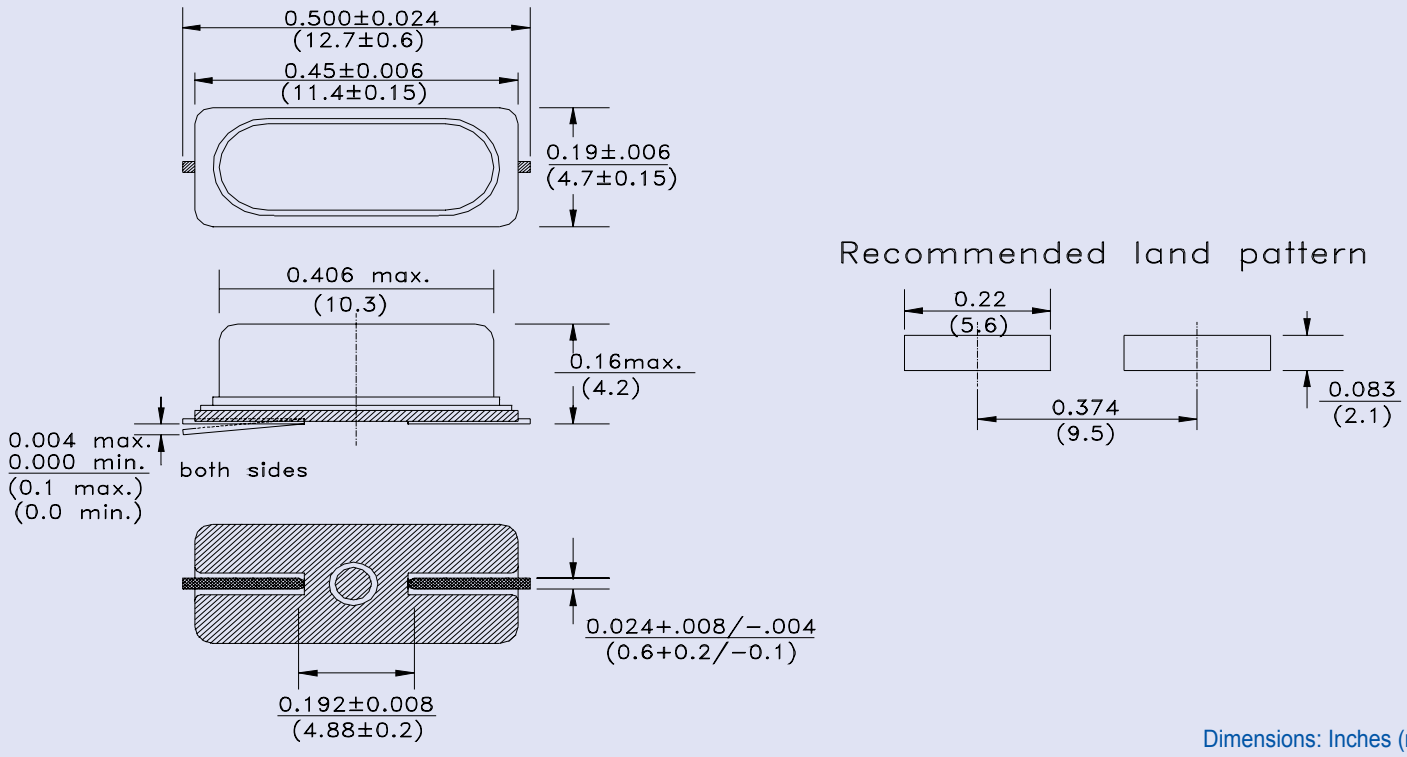

Dimensions: Inches (mm)

TAPE & REEL:

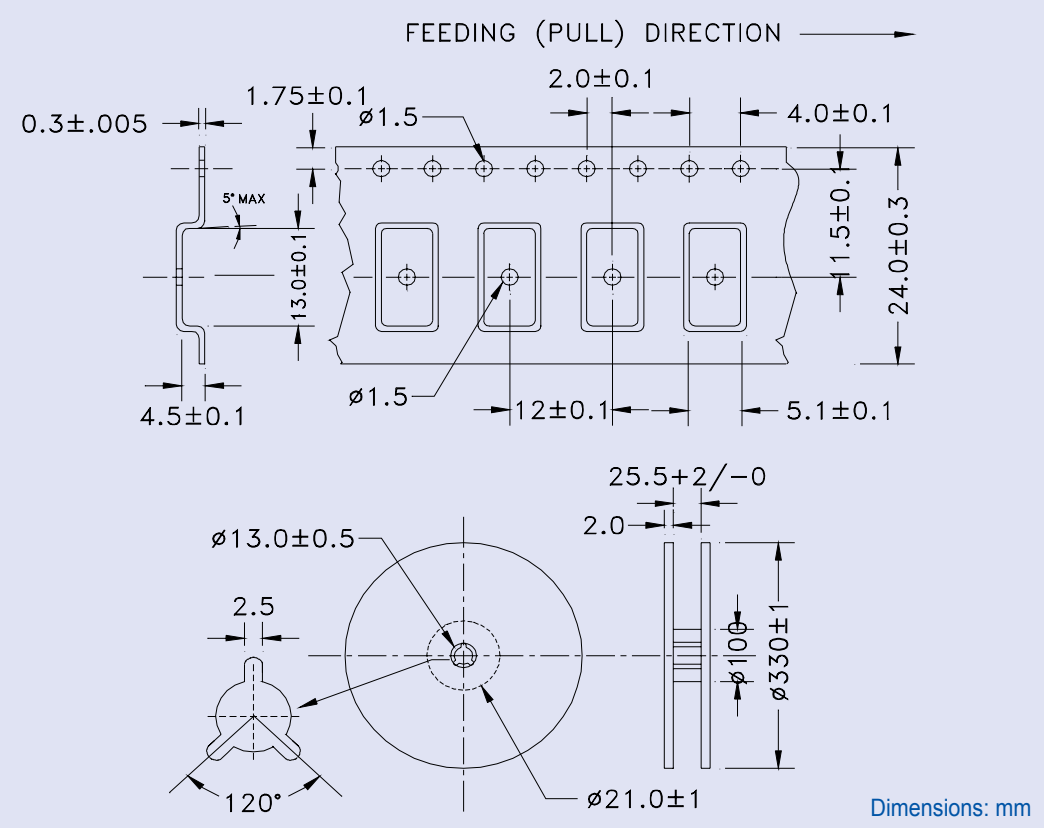

Dimensions: mm

30332 Esperanza, Rancho Santa Margarita, California 92688
tel 949-546-8000 | fax 949-546-8001 | www.abracon.com